Excavators Electric Material Handlers

ER 934 C - ER 954 C
High Rise High Rise

ER 934 C Operating Weight: 56,200 - 56,600 kg
ER 944 C Operating Weight: 73,400 - 74,700 kg
ER 954 C Operating Weight: 95,800 - 97,000 kg

LIEBHERR

ER 934 C Litronic®

Operating Weight: 56,200 - 56,600 kg
Engine Capacity: 160 kW / 218 PS

ER 944 C Litronic®

Operating Weight: 73,400 - 74,700 kg
Engine Capacity: 200 kW / 272 PS

ER 954 C Litronic®

Operating Weight: 95,800 - 97,000 kg
Engine Capacity: 250 kW / 340 PS

Performance

These new electric Material Handlers have been designed to meet the specific needs of industrial handling. A range of equipment even wider for the High Rise and uppercarriages optimized for long working radius provide the ideal answer to all the demands which arise in the industry.
The performance of the kinematic chain formed from components from our in-house production, combined with the power of the electric motor, maximize the performance of the machine when it comes to lifting power, precision, and speed of operation. The equipment's performance is enhanced by the mobility provided by the crawler undercarriage as well as the height of work adapted to the industrial process.

Reliability

Backed by more than 30 years experience in the construction of electric excavators, Liebherr designed the new ER 934 C, ER 944 C and ER 954 C High Rise with the aim of providing top performance whatever the challenge might be. The structure of the machine, using components from our own manufacture for the electric drive, has been completely rethought, and so moves away from simply being an adaptation of a diesel-engine machine. Being intended for key functions in the organization of industrial sites, Liebherr electric Material Handlers provide a very high level of reliability. The service life of the hydraulic components has also been increased, thanks to the constant regime of the electric drive. The concept of the single actuator (one single electric motor for all the hydraulic functions) allows all the low-voltage functions to be concentrated in a single box.

Comfort

Helping the operator to concentrate on his work and get the best out of his machine is achieved by providing a comfortable driving position, good panoramic visibility, and a highly ergonomic layout of the controls. The new electric Material Handlers offer the same level of comfort as on the thermal excavators (arrangement of the controls, driver's seat, climate control, large window areas, etc.). The electric motor system adds a further layer of comfort thanks to the low noise emissions and absence of vibration. For Liebherr, comfort also means ease of daily maintenance of the machine in terms of access to the service and inspection points, so as to minimize down time.

Economy

Investing in the acquisition of an electric Material Handler is a great long-term advantage. Constant increases in the costs of conventional energy sources are pushing up operating charges, and reducing profi t margins considerably. Environmental criteria, in particular CO_2 emissions, are also playing a constantly greater part in the choice of power systems and working methods. With the electric drive, Liebherr offers an economical alternative to conventional diesel-engine machines, and a solution with real respect for the environment. Also, the excavator is permanently available, with no need to refill. There are no constraints (e.g. DPF or AdBlue). Mobility is added to economy, through custom cable reels solutions.

Excavator electric at a glance

Cab with special control panel
- Control power on/off of the excavator
- Additional interface for the cable reel option

Integrated electric cabinet
- Hard conditions
- Pressure relief system to prevent the intrusion of dust
- Closing with padlocks
- Robust

Wide range of tools, including
- Grapples
- Shells for Loose Material
- Wood clamps
- Quick change adapter

Wide range of equipments
- Range of equipments from the stationary excavators for a moving machine
- Special adjustments on demand

Kinematic chain Liebherr
- High work precision
- Immediate response
- Large power for maximum productivity

Electric motor
- Hard conditions
- Constant regime whatever the load
- Integrated sensors for maximum availability

Cab elevation
- Wide range of rigid cab elevation and adjustable hydraulically
- High visibility of the working area and the site

Access
- As standard, safety and comfort to access the work space
- Handrails, non-slip surfaces

Walkways
- Wide walkways and handrails all around the excavator
- Can be fitted with secure trapdoors, wicket doors

Undercarriage
- Derived from thermal excavators, specifically equipped for electric excavators :
  - cable entry
  - power connector
  - slip ring collector
- Stability for all operations

Cable entry
- In free-standing, cable left entry as standard, right or rear on demand
- Rear cable reel for a large radius of action and movement facilities
- Side cable reel for in-line processes

VarioLiftPlus

Variable Boom Mounting Positions for Optimized Lift Capacities

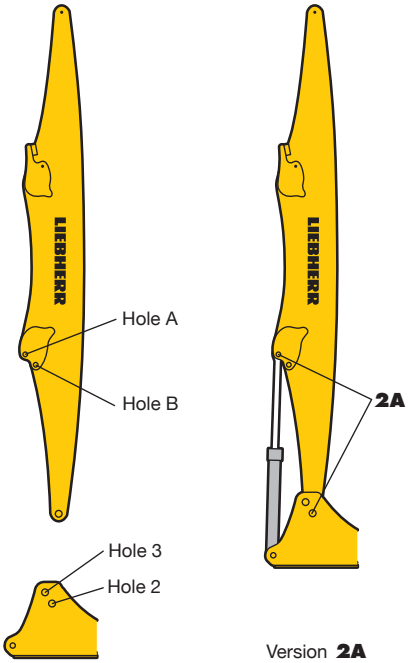

Version **2A**

with **the same** working range

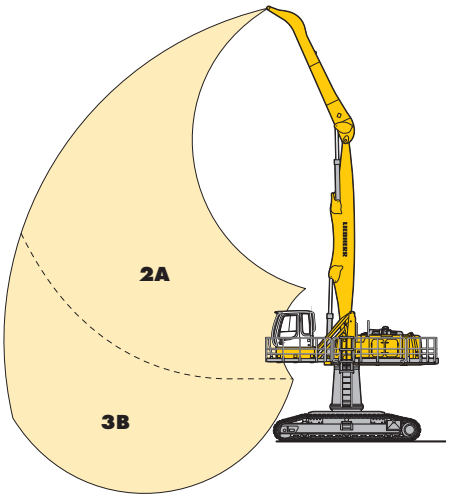

Kinematic variant 2A:
Increased lift capacities above ground level
Kinematic variant 3B:
Increased lift capacities below ground level and when working at large outreach

with a **different** working range

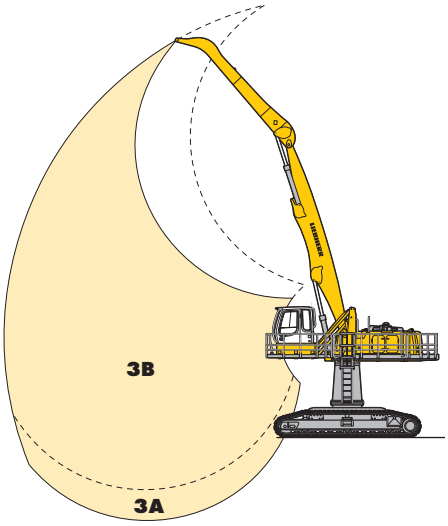

Kinematic variant 3A:
Altered range curve with additional reach depth, e.g. for unloading from ships

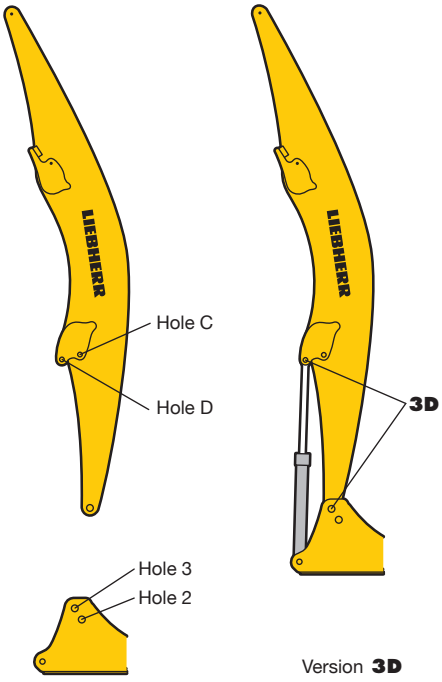

Version **3D**

with a **different** working range

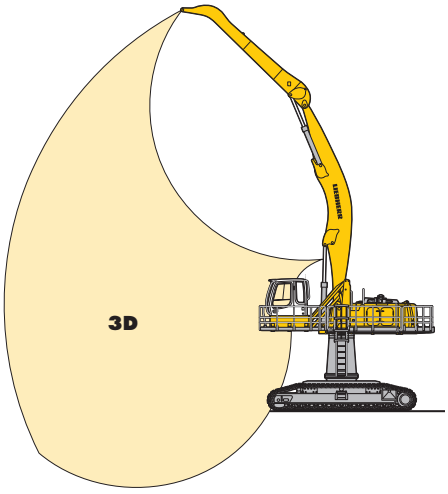

Kinematic variant 3D:
Increased lift capacities below ground level and when working at large outreach

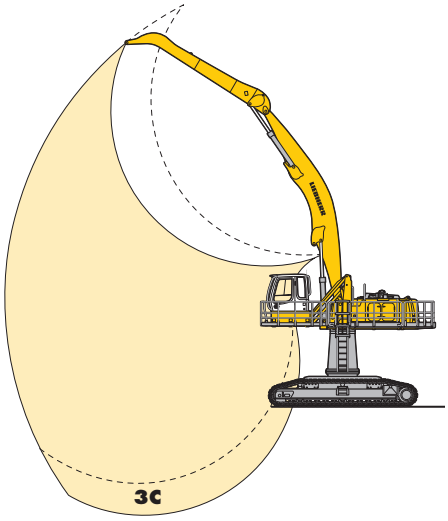

Kinematic variant 3C:
Altered range curve with additional reach depth, e.g. for unloading from ships

Technical Data

Electric Motor

Engine	induction motor dedicated definition Liebherr		
	934	944	954
Power rating (as per CEI 34-1)	160 kW (218 HP)	200 kW (272 HP)	250 kW (340 HP)
Rated voltage	400 V – 50 Hz*		
Number of poles	4		
Design type	horizontal axle B35 axle height 315 mm		
Standard degree of protection	IP55		
Insulation	class F		
Cooling	IC06		
Heat protection for windings			
Heat protection for bearings			
Anti-condensation heating system resistors			

Electric System

The 400 V electrical cabinet provides a degree of protection to IP55.
This houses the following components:
– Electrical cabinet – remote control inside the cab
– Star/delta starter for motor
– Outlets for supplying auxiliary elements: heating, climate control
– Overheat protection devices
– Integrated heating and ventilation
– Filtered booster
– Transformers – rectifier for 24 V control circuit
– Motor protection
– Auxiliary batteries: 2 x 135 Ah/12 V: secured functions: lighting for excavator/ attachment position (option)
– Connecting inside closed panel
– Equipment: slip ring collector
power connector
embedded cable reel

Hydraulic System

	934	944	954
Hydraulic pump			
for the attachment	two Liebherr swash plate pumps with variable output		
Max. flow	2 x 253 l/min.	2 x 305 l/min.	2 x 341 l/min.
Max. pressure	350 bar		
Pumpenansteuerung	electro-hydraulic, with electronic regulation by power limit, minimum pump flow at max. pressure, distribution of oil to different receptor components proportional to demand		
Hydraulic pump			
for the swing drive	reversible swash plate pump, in closed circuit		
Max. flow	170 l/min.	205 l/min.	205 l/min.
Max. pressure	370 bar		
Hydraulic tank	340 l	460 l	440 l
Hydraulic system	550 l	710 l	790 l
Filtration	934: filter in the return circuit, with integrated fine filter elements (5 µm) 944/954: 2 filters in the return circuit, with integrated fine filter elements (5 µm)		
Cooling	radiator equipped with hydrostatic drive fan for cooling the hydraulic oil and climate control condenser		
Tool Control	10 flow rates and pressures adjustable as option for optional accessories		

Hydraulic Controls

Power distribution	with the aid of hydraulic distributors with integrated safety valves
Flow summation	to boom stick and stick
Closed-loop circuit	for uppercarriage swing drive mechanism
Control	
Attachment and swing	proportional by handling element in cross operation
Travel	proportional by pedals or by lever
Additional functions	proportional by pedals or by toggle switch

Swing Drive

Drive by	hydraulic swash plate motor with integrated brake valves		
Transmission	Liebherr compact planetary reduction gear		
Swing ring	Liebherr, sealed single race ball bearing swing ring, internal teeth		
	934	944	954
Swing speed	0 – 9.4 RPM stepless	0 – 7.9 RPM stepless	0 – 5.6 RPM stepless
Swing torque	81.07 kNm	119 kNm	167.23 kNm
Holding brake	oil-bath disk brake (negative action)		
Option	pedal controlled positioning brake		

Operator's Cab

Cab	single shell concept with shaped profiles, resiliently mounted, sound insulated, tinted windows. Front window can be folded away under roof, door with sliding window		
Operator's seat	shock absorbing suspension, adjustable to operator's weight, 6-way adjustable seat		
Controls	integrated into adjustable seat consoles		
Monitoring	menu driven digital display of current operating conditions. Automatic monitoring, display, warning (audible and visual signal) and saving of machine malfunction data, such as overheating of windings, motor bearings, or low hydraulic oil level		
Climate control	standard climate control system, combined cooler/heater, additional dust filter in the outside/ fresh air circuit		
Noise emission 2000/14/EC	934	944	954
L_{WA} (surround noise)	101 dB(A)	103 dB(A)	105 dB(A)

Undercarriage

Version HR			
Drive	Liebherr swash plate motors with integrated brake valves on both sides		
Transmission	Liebherr planetary reduction gears		
	934	944	954
Travel speed	2.6 km/h	2.6 km/h	2.5 km/h
Drawbar pull max.	318 kN	363 kN	397 kN
Track components	maintenance-free B 60	maintenance-free D 7 G	maintenance-free D 8 K
Track rollers/Carrier rollers	9/2	13/3	13/3
Tracks	sealed and greased		
Track pads	triple grouser		
Digging locks	wet multi-discs (spring applied, pressure released)		
Brake valves	integrated into travel motor		

Attachment

Type	high-strength steel for extreme stresses. Bearings designed for optimum distribution of stresses
Hydraulic cylinders	Liebherr cylinders with end-of-travel shock absorbing, fitted with guide and sealing joints
Pivots	sealed, low maintenance
Lubrication	centralised semi-automatic Liebherr lubrication system
VarioLift$_{Plus}$	variable boom mounting positions for optimized lift capacities

* Other voltages and frequencies possible on request.

The Right Attachment for Every Application

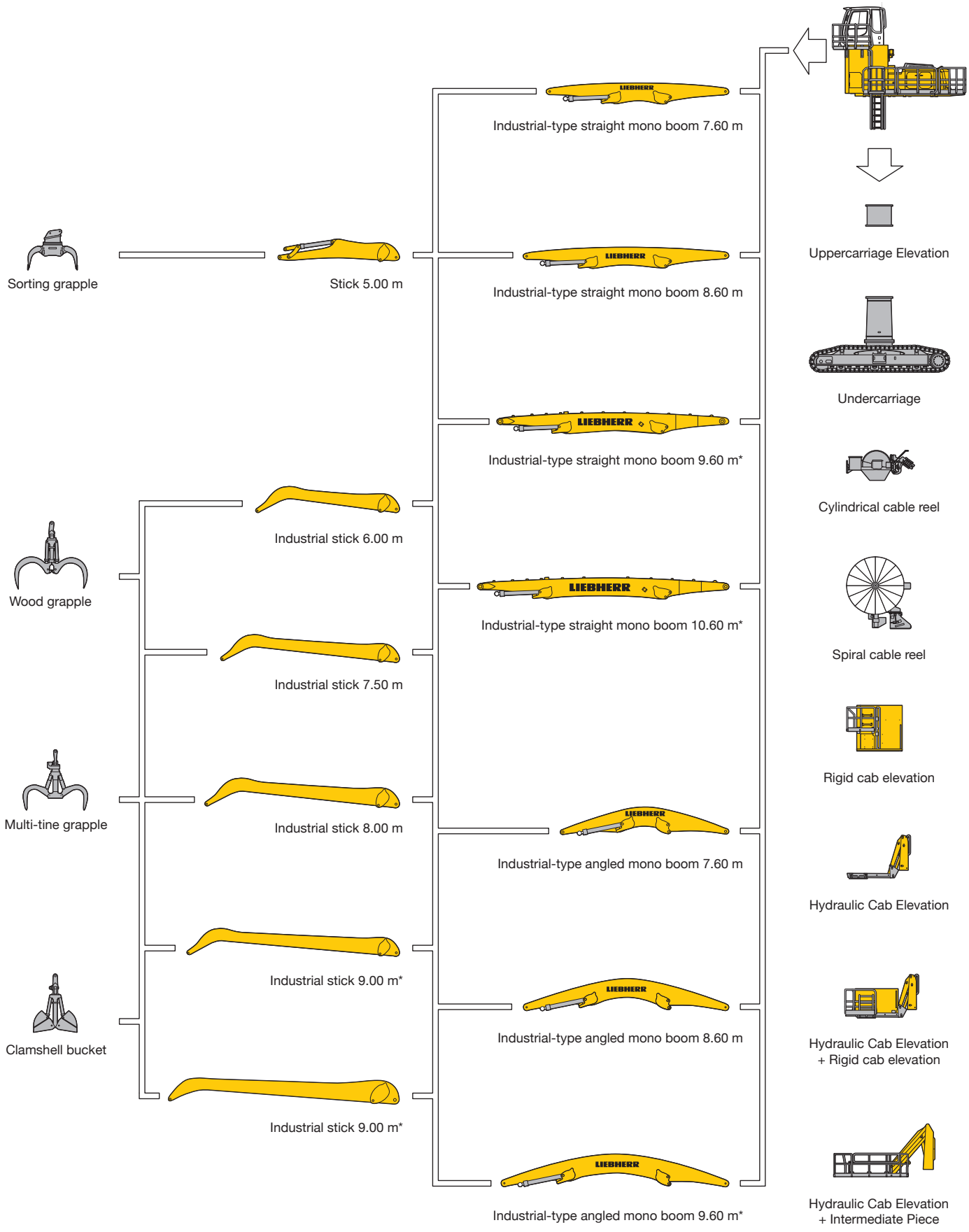

* presented configurations

Dimensions

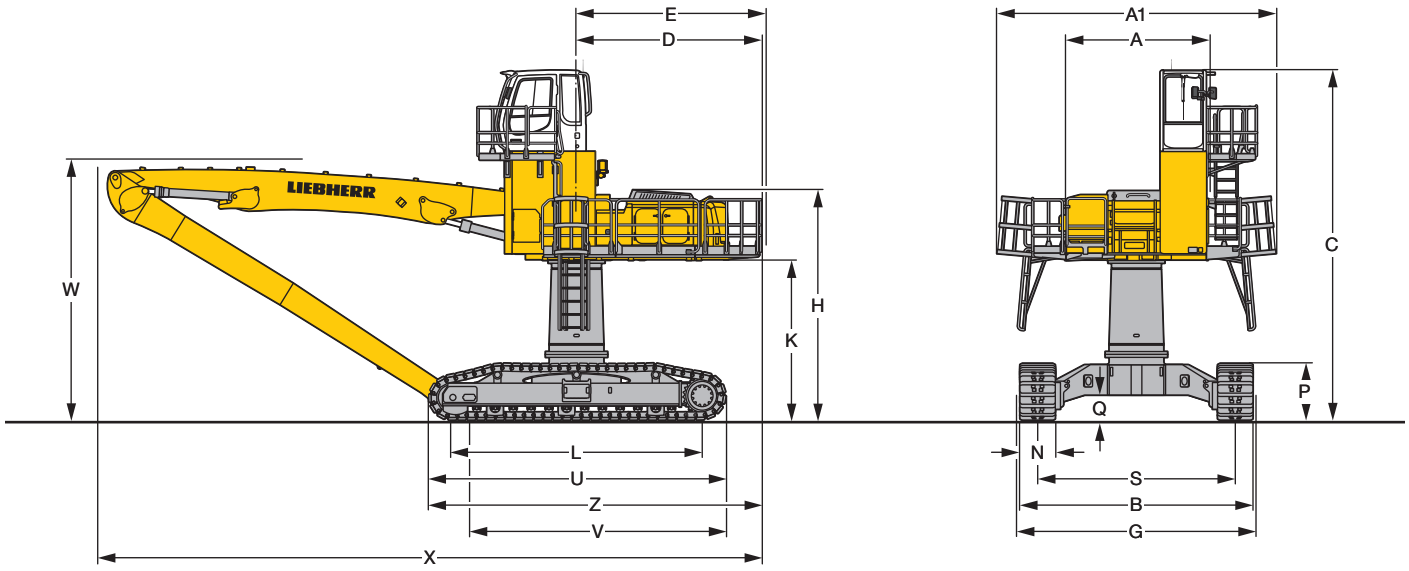

	mm
A	3,225
A1	5,935
C	5,800
D	3,930
E	4,030
F	3,770
H	5,780
K	3,395
L	5,350
P	1,215
Q	530
S	4,200
U	6,320
N	750
B	4,950
G	5,060
Z	7,095

E = Tail radius

Industrial-Type Straight Mono Boom 9.60 m and Industrial Stick	m	9.00	10.00
V	mm	5,800	5,450
W	mm	4,850	5,550
X	mm	14,100	14,100

Industrial-Type Straight Mono Boom 10.60 m and Industrial Stick	m	9.00	10.00
V	mm	6,950	6,000
W	mm	4,900	4,900
X	mm	15,100	15,100

Industrial-Type Angled Mono Boom 9.60 m and Industrial Stick	m	9.00	10.00
V	mm	5,700	5,500
W	mm	5,450	6,500
X	mm	14,100	14,100

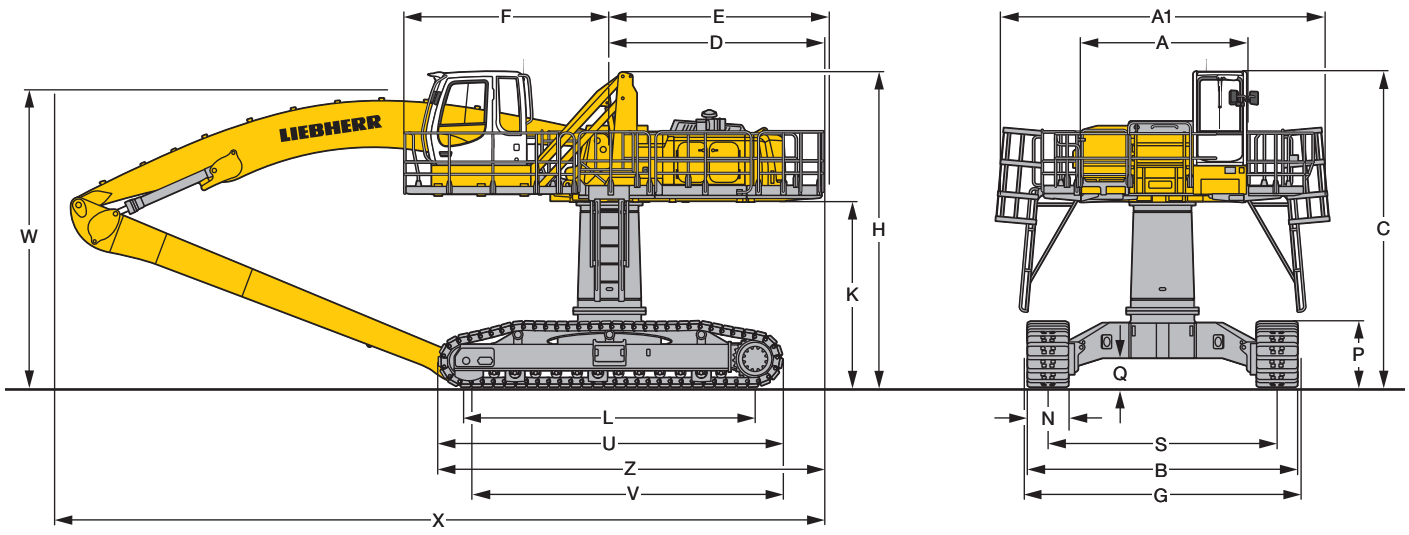

Industrial Attachment

with Industrial-Type Straight Mono Boom 9.60 m

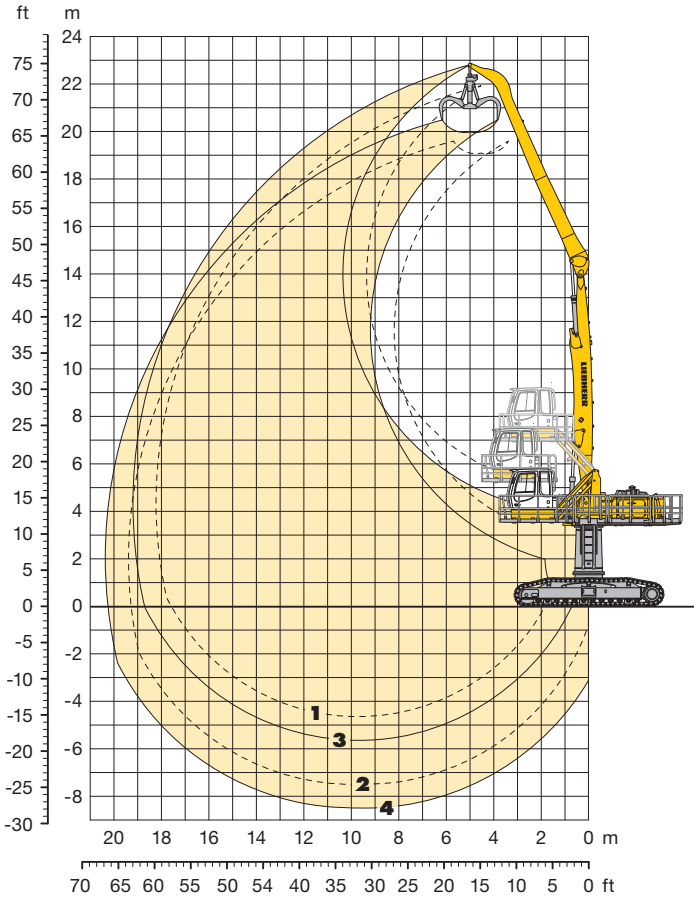

Attachment Envelope

Kinematic variants 2A

1 with industrial stick 9.00 m
2 with industrial stick 9.00 m and grapple model GM 70C
3 with industrial stick 10.00 m
4 with industrial stick 10.00 m and grapple model GM 70C

Operating Weight and Ground Pressure

Operating weight includes basic machine with hydraulic cab elevation + intermediate piece 0.5 m, counterweight 7.5 t, industrial-type straight mono boom 9.60 m, industrial stick 9.00 m and grapple model GM 70C with 5 semi-closed tines 0.80 m³ (1,705 kg).

Undercarriage		HR
Pad width	mm	750
Weight	kg	56,200
Ground pressure	kg/cm²	0.70

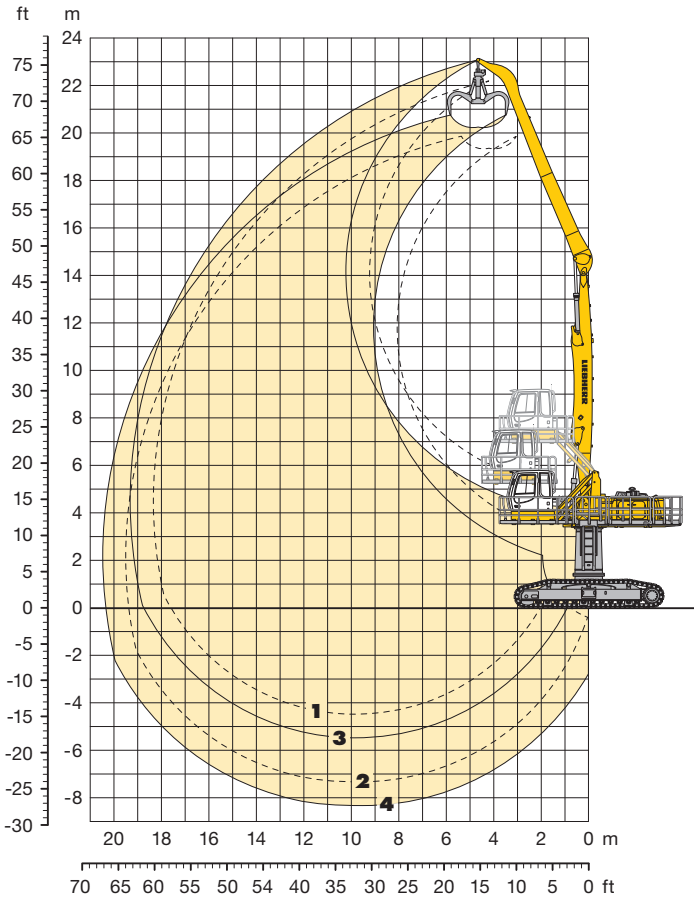

Attachment Envelope

Kinematic variants 3B

1 with industrial stick 9.00 m
2 with industrial stick 9.00 m and grapple model GM 70C
3 with industrial stick 10.00 m
4 with industrial stick 10.00 m and grapple model GM 70C

Operating Weight and Ground Pressure

Operating weight includes basic machine with hydraulic cab elevation + intermediate piece 0.5 m, counterweight 7.5 t, industrial-type straight mono boom 9.60 m, industrial stick 10.00 m and grapple model GM 70C with 5 semi-closed tines 0.80 m³ (1,705 kg).

Undercarriage		HR
Pad width	mm	750
Weight	kg	56,400
Ground pressure	kg/cm²	0.70

Lift Capacities

with Industrial-Type Straight Mono Boom 9.60 m

Industrial Stick 9.00 m (Variant 2A)

m	Under-carriage	3.0 m		4.5 m		6.0 m		7.5 m		9.0 m		10.5 m		12.0 m		13.5 m		15.0 m		16.5 m		18.0 m		19.5 m				
																												m
24.0	HR																											
22.5	HR																											
21.0	HR					6.6*	6.6*																			5.3*	5.3*	7.2
19.5	HR							6.4*	6.4*	5.4*	5.4*															4.3*	4.3*	10.0
18.0	HR									6.2*	6.2*	5.3*	5.3*	3.8*	3.8*											3.7*	3.7*	12.0
16.5	HR									6.5*	6.5*	5.9*	5.9*	5.1*	5.1*	3.5*	3.5*									3.4*	3.4*	13.5
15.0	HR											6.1*	6.1*	5.5*	5.5*	4.8*	4.8*									3.2*	3.2*	14.8
13.5	HR											6.1*	6.1*	5.5*	5.5*	5.0*	5.0*	4.2*	4.2*							3.1*	3.1*	15.7
12.0	HR											6.1*	6.1*	5.5*	5.5*	5.0*	5.0*	4.5*	4.5*	3.0*	3.0*					3.0*	3.0*	16.5
10.5	HR									6.9*	6.9*	6.2*	6.2*	5.6*	5.6*	5.0*	5.0*	4.5*	4.5*	4.0*	4.0*					2.9*	2.9*	17.1
9.0	HR									7.1*	7.1*	6.3*	6.3*	5.6*	5.6*	5.0*	5.0*	4.5*	4.5*	4.0*	4.0*					2.9*	2.9*	17.6
7.5	HR							7.8*	7.8*	7.4*	7.4*	6.5*	6.5*	5.7*	5.7*	5.1*	5.1*	4.5*	4.5*	3.9*	3.9*					2.9*	2.9*	17.9
6.0	HR					8.6*	8.6*	9.1*	9.1*	7.7*	7.7*	6.6*	6.6*	5.8*	5.8*	5.1*	5.1*	4.4*	4.4*	3.9*	3.9*	3.1*	3.1*			2.9*	2.9*	18.1
4.5	HR			16.0*	16.0*	11.9*	11.9*	9.5*	9.5*	7.9*	7.9*	6.7*	6.7*	5.8*	5.8*	5.0*	5.0*	4.4*	4.4*	3.7*	3.7*	3.0*	3.0*			2.8*	2.8*	18.2
3.0	HR	1.6*	1.6*	9.4*	9.4*	12.3*	12.3*	9.7*	9.7*	7.9*	7.9*	6.7*	6.7*	5.7*	5.7*	4.9*	4.9*	4.2*	4.2*	3.5*	3.5*	2.7*	2.7*			2.5*	2.5*	18.2
1.5	HR	1.7*	1.7*	4.8*	4.8*	12.1*	12.1*	9.5*	9.5*	7.8*	7.8*	6.5*	6.5*	5.6*	5.6*	4.7*	4.7*	4.0*	4.0*	3.3*	3.3*					2.3*	2.3*	18.0
0	HR	2.3*	2.3*	4.4*	4.4*	9.4*	9.4*	9.1*	9.1*	7.4*	7.4*	6.2*	6.2*	5.3*	5.3*	4.4*	4.4*	3.7*	3.7*	2.8*	2.8*					2.0*	2.0*	17.6
-1.5	HR	3.0*	3.0*	4.8*	4.8*	8.4*	8.4*	8.2*	8.2*	6.8*	6.8*	5.7*	5.7*	4.8*	4.8*	4.0*	4.0*	3.2*	3.2*	2.2*	2.2*					2.2*	2.2*	16.5
-3.0	HR					8.4*	8.4*	7.0*	7.0*	5.9*	5.9*	4.9*	4.9*	4.1*	4.1*	3.3*	3.3*									2.5*	2.5*	14.9
-4.5	HR									4.7*	4.7*	3.9*	3.9*													3.5*	3.5*	11.3

Industrial Stick 10.00 m (Variant 2A)

m	Under-carriage	3.0 m		4.5 m		6.0 m		7.5 m		9.0 m		10.5 m		12.0 m		13.5 m		15.0 m		16.5 m		18.0 m		19.5 m				
																												m
24.0	HR																											
22.5	HR					5.6*	5.6*																			5.5*	5.5*	6.1
21.0	HR							5.7*	5.7*	4.6*	4.6*															4.0*	4.0*	9.5
19.5	HR									5.5*	5.5*	4.6*	4.6*													3.4*	3.4*	11.8
18.0	HR											5.3*	5.3*	4.5*	4.5*											3.1*	3.1*	13.5
16.5	HR											5.6*	5.6*	5.1*	5.1*	4.2*	4.2*									2.8*	2.8*	14.9
15.0	HR											5.8*	5.8*	5.2*	5.2*	4.8*	4.8*	3.8*	3.8*							2.7*	2.7*	16.0
13.5	HR											5.7*	5.7*	5.2*	5.2*	4.8*	4.8*	4.4*	4.4*	3.1*	3.1*					2.6*	2.6*	16.9
12.0	HR											5.8*	5.8*	5.2*	5.2*	4.8*	4.8*	4.3*	4.3*	3.9*	3.9*					2.5*	2.5*	17.6
10.5	HR											5.9*	5.9*	5.3*	5.3*	4.8*	4.8*	4.3*	4.3*	3.9*	3.9*	2.8*	2.8*			2.4*	2.4*	18.2
9.0	HR											6.0*	6.0*	5.4*	5.4*	4.8*	4.8*	4.4*	4.4*	3.9*	3.9*	3.4*	3.4*			2.4*	2.4*	18.6
7.5	HR									6.8*	6.8*	6.2*	6.2*	5.5*	5.5*	4.9*	4.9*	4.4*	4.4*	3.9*	3.9*	3.4*	3.4*			2.4*	2.4*	19.0
6.0	HR							7.1*	7.1*	7.3*	7.3*	6.3*	6.3*	5.6*	5.6*	4.9*	4.9*	4.4*	4.4*	3.8*	3.8*	3.3*	3.3*			2.4*	2.4*	19.1
4.5	HR			6.3*	6.3*	8.7*	8.7*	9.1*	9.1*	7.6*	7.6*	6.5*	6.5*	5.6*	5.6*	4.9*	4.9*	4.3*	4.3*	3.8*	3.8*	3.2*	3.2*			2.5*	2.5*	19.2
3.0	HR	4.6*	4.6*	16.2*	16.2*	11.9*	11.9*	9.4*	9.4*	7.7*	7.7*	6.5*	6.5*	5.6*	5.6*	4.9*	4.9*	4.2*	4.2*	3.6*	3.6*	3.0*	3.0*			2.3*	2.3*	19.2
1.5	HR	2.0*	2.0*	6.9*	6.9*	12.1*	12.1*	9.5*	9.5*	7.7*	7.7*	6.5*	6.5*	5.5*	5.5*	4.8*	4.8*	4.1*	4.1*	3.4*	3.4*	2.7*	2.7*			2.0*	2.0*	19.0
0	HR	2.2*	2.2*	4.9*	4.9*	11.7*	11.7*	9.2*	9.2*	7.5*	7.5*	6.3*	6.3*	5.3*	5.3*	4.5*	4.5*	3.8*	3.8*	3.1*	3.1*	2.3*	2.3*			1.7*	1.7*	18.7
-1.5	HR	2.8*	2.8*	4.7*	4.7*	9.1*	9.1*	8.6*	8.6*	7.1*	7.1*	5.9*	5.9*	5.0*	5.0*	4.2*	4.2*	3.4*	3.4*	2.7*	2.7*					1.9*	1.9*	17.8
-3.0	HR	3.4*	3.4*	5.1*	5.1*	8.5*	8.5*	7.7*	7.7*	6.4*	6.4*	5.3*	5.3*	4.4*	4.4*	3.7*	3.7*	2.9*	2.9*							2.1*	2.1*	16.5
-4.5	HR					7.6*	7.6*	6.4*	6.4*	5.4*	5.4*	4.5*	4.5*	3.7*	3.7*	2.9*	2.9*									2.5*	2.5*	14.3

Height | Can be slewed through 360° | In longitudinal position of undercarriage | Max. reach | * Limited by hydr. capacity

The lift capacities are stated in metric tonnes (t) on the lifting gear's stick tip, and can be lifted 360° on firm, level supporting surface. Capacities are valid for 750 mm track flat pads. Indicated loads are based on ISO 10567 standard and do not exceed 75 % of tipping or 87 % of hydraulic capacity (indicated via *). Lifting capacity of the excavator is limited by machine stability, hydraulic capacity and maximum permissible load of the load hook.

According to European Standard, EN 474-5: In the European Union excavators have to be equipped with an overload warning device, a load diagram and automatic safety check valves on hoist cylinders and stick cylinder(s), when they are used for lifting operations which require the use of lifting accessories.

Lift Capacities

with Industrial-Type Straight Mono Boom 9.60 m

Industrial Stick 9.00 m (Variant 3B)

m	Under-carriage	3.0 m		4.5 m		6.0 m		7.5 m		9.0 m		10.5 m		12.0 m		13.5 m		15.0 m		16.5 m		18.0 m		19.5 m				m
24.0	HR																											
22.5	HR																											
21.0	HR							5.4*	5.4*																	5.2*	5.2*	7.7
19.5	HR							6.4*	6.4*	5.6*	5.6*															4.2*	4.2*	10.4
18.0	HR									5.4*	5.4*	5.1*	5.1*	4.1*	4.1*											3.7*	3.7*	12.3
16.5	HR									5.2*	5.2*	4.9*	4.9*	4.7*	4.7*	3.9*	3.9*									3.4*	3.4*	13.8
15.0	HR											4.8*	4.8*	4.5*	4.5*	4.4*	4.4*									3.2*	3.2*	15.0
13.5	HR											4.7*	4.7*	4.5*	4.5*	4.3*	4.3*	4.1*	4.1*							3.1*	3.1*	15.9
12.0	HR									5.1*	5.1*	4.8*	4.8*	4.5*	4.5*	4.3*	4.3*	4.1*	4.1*	3.4*	3.4*					3.0*	3.0*	16.7
10.5	HR									5.3*	5.3*	5.0*	5.0*	4.6*	4.6*	4.4*	4.4*	4.1*	4.1*	3.9*	3.9*					2.9*	2.9*	17.3
9.0	HR									5.6*	5.6*	5.2*	5.2*	4.8*	4.8*	4.5*	4.5*	4.2*	4.2*	3.9*	3.9*					2.9*	2.9*	17.8
7.5	HR							6.8*	6.8*	6.1*	6.1*	5.5*	5.5*	5.0*	5.0*	4.6*	4.6*	4.3*	4.3*	4.0*	4.0*	3.1*	3.1*			2.9*	2.9*	18.1
6.0	HR			6.5*	6.5*	8.9*	8.9*	7.6*	7.6*	6.5*	6.5*	5.8*	5.8*	5.2*	5.2*	4.7*	4.7*	4.3*	4.3*	4.0*	4.0*	3.5*	3.5*			2.9*	2.9*	18.3
4.5	HR			14.0*	14.0*	10.4*	10.4*	8.4*	8.4*	7.0*	7.0*	6.1*	6.1*	5.4*	5.4*	4.9*	4.9*	4.4*	4.4*	4.0*	4.0*	3.6*	3.6*			3.0*	3.0*	18.3
3.0	HR	1.3*	1.3*	7.3*	7.3*	11.5*	11.5*	9.1*	9.1*	7.5*	7.5*	6.4*	6.4*	5.6*	5.6*	5.0*	5.0*	4.5*	4.5*	4.1*	4.1*	3.6*	3.6*			3.1*	3.1*	18.3
1.5	HR	1.6*	1.6*	4.3*	4.3*	12.3*	12.3*	9.6*	9.6*	7.8*	7.8*	6.6*	6.6*	5.8*	5.8*	5.1*	5.1*	4.5*	4.5*	4.0*	4.0*	3.4*	3.4*			3.2*	3.2*	18.1
0	HR	2.2*	2.2*	4.2*	4.2*	8.7*	8.7*	9.8*	9.8*	8.0*	8.0*	6.8*	6.8*	5.8*	5.8*	5.1*	5.1*	4.5*	4.5*	3.9*	3.9*					3.4*	3.4*	17.6
-1.5	HR			4.6*	4.6*	8.0*	8.0*	9.8*	9.8*	8.0*	8.0*	6.8*	6.8*	5.8*	5.8*	5.0*	5.0*	4.4*	4.4*	3.7*	3.7*					3.7*	3.7*	16.5
-3.0	HR					8.2*	8.2*	9.5*	9.5*	7.8*	7.8*	6.6*	6.6*	5.6*	5.6*	4.8*	4.8*									4.2*	4.2*	14.8
-4.5	HR																											

Industrial Stick 10.00 m (Variant 3B)

m	Under-carriage	3.0 m		4.5 m		6.0 m		7.5 m		9.0 m		10.5 m		12.0 m		13.5 m		15.0 m		16.5 m		18.0 m		19.5 m				m
24.0	HR																											
22.5	HR					5.9*	5.9*																			5.3*	5.3*	6.7
21.0	HR							5.8*	5.8*	4.8*	4.8*															4.0*	4.0*	9.9
19.5	HR									5.2*	5.2*	4.8*	4.8*	3.5*	3.5*											3.4*	3.4*	12.1
18.0	HR											4.6*	4.6*	4.4*	4.4*	3.4*	3.4*									3.0*	3.0*	13.8
16.5	HR											4.4*	4.4*	4.2*	4.2*	4.1*	4.1*	3.0*	3.0*							2.8*	2.8*	15.1
15.0	HR											4.3*	4.3*	4.1*	4.1*	4.0*	4.0*	3.9*	3.9*							2.7*	2.7*	16.2
13.5	HR											4.3*	4.3*	4.1*	4.1*	3.9*	3.9*	3.8*	3.8*	3.4*	3.4*					2.6*	2.6*	17.1
12.0	HR											4.4*	4.4*	4.2*	4.2*	4.0*	4.0*	3.8*	3.8*	3.6*	3.6*					2.5*	2.5*	17.8
10.5	HR											4.5*	4.5*	4.3*	4.3*	4.0*	4.0*	3.8*	3.8*	3.6*	3.6*	3.1*	3.1*			2.4*	2.4*	18.4
9.0	HR									5.1*	5.1*	4.7*	4.7*	4.4*	4.4*	4.1*	4.1*	3.9*	3.9*	3.7*	3.7*	3.5*	3.5*			2.4*	2.4*	18.8
7.5	HR									5.5*	5.5*	5.0*	5.0*	4.6*	4.6*	4.3*	4.3*	4.0*	4.0*	3.7*	3.7*	3.5*	3.5*			2.4*	2.4*	19.1
6.0	HR							6.8*	6.8*	6.0*	6.0*	5.4*	5.4*	4.8*	4.8*	4.4*	4.4*	4.1*	4.1*	3.8*	3.8*	3.5*	3.5*			2.4*	2.4*	19.3
4.5	HR			6.9*	6.9*	9.3*	9.3*	7.6*	7.6*	6.5*	6.5*	5.7*	5.7*	5.1*	5.1*	4.6*	4.6*	4.2*	4.2*	3.9*	3.9*	3.5*	3.5*			2.5*	2.5*	19.3
3.0	HR	3.0*	3.0*	14.6*	14.6*	10.6*	10.6*	8.4*	8.4*	7.0*	7.0*	6.0*	6.0*	5.3*	5.3*	4.8*	4.8*	4.3*	4.3*	3.9*	3.9*	3.5*	3.5*			2.5*	2.5*	19.3
1.5	HR	1.8*	1.8*	5.9*	5.9*	11.6*	11.6*	9.1*	9.1*	7.5*	7.5*	6.3*	6.3*	5.5*	5.5*	4.9*	4.9*	4.4*	4.4*	3.9*	3.9*	3.5*	3.5*			2.6*	2.6*	19.1
0	HR	2.1*	2.1*	4.5*	4.5*	10.7*	10.7*	9.5*	9.5*	7.7*	7.7*	6.5*	6.5*	5.6*	5.6*	4.9*	4.9*	4.4*	4.4*	3.9*	3.9*	3.4*	3.4*			2.9*	2.9*	18.7
-1.5	HR	2.7*	2.7*	4.6*	4.6*	8.5*	8.5*	9.6*	9.6*	7.9*	7.9*	6.6*	6.6*	5.7*	5.7*	4.9*	4.9*	4.3*	4.3*	3.8*	3.8*					3.2*	3.2*	17.8
-3.0	HR			5.0*	5.0*	8.1*	8.1*	9.5*	9.5*	7.8*	7.8*	6.5*	6.5*	5.6*	5.6*	4.8*	4.8*	4.2*	4.2*							3.6*	3.6*	16.4
-4.5	HR					8.3*	8.3*	9.1*	9.1*	7.5*	7.5*	6.3*	6.3*	5.3*	5.3*	4.5*	4.5*									4.2*	4.2*	14.1

Height | Can be slewed through 360° | In longitudinal position of undercarriage | Max. reach | * Limited by hydr. capacity

The lift capacities are stated in metric tonnes (t) on the lifting gear's stick tip, and can be lifted 360° on firm, level supporting surface. Capacities are valid for 750 mm track flat pads. Indicated loads are based on ISO 10567 standard and do not exceed 75 % of tipping or 87 % of hydraulic capacity (indicated via *). Lifting capacity of the excavator is limited by machine stability, hydraulic capacity and maximum permissible load of the load hook.

According to European Standard, EN 474-5: In the European Union excavators have to be equipped with an overload warning device, a load diagram and automatic safety check valves on hoist cylinders and stick cylinder(s), when they are used for lifting operations which require the use of lifting accessories.

Industrial Attachment

with Industrial-Type Straight Mono Boom 10.60 m

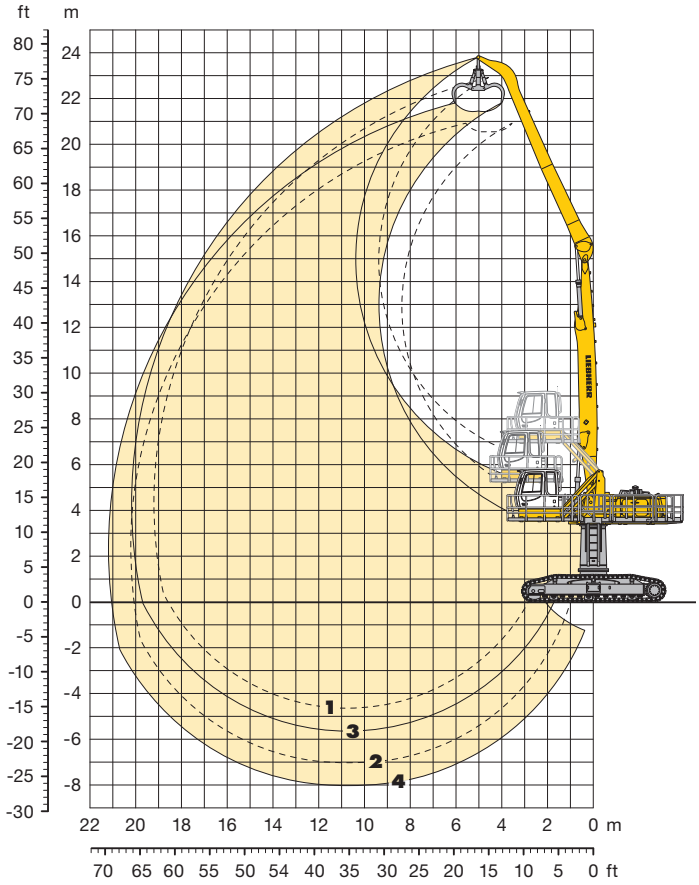

Attachment Envelope

Kinematic variants 2A

1	with industrial stick 9.00 m
2	with industrial stick 9.00 m and grapple model GM 65
3	with industrial stick 10.00 m
4	with industrial stick 10.00 m and grapple model GM 65

Operating Weight and Ground Pressure

Operating weight includes basic machine with hydraulic cab elevation + intermediate piece 0.5 m, counterweight 7.5 t, industrial-type straight mono boom 10.60 m, industrial stick 9.00 m and grapple model GM 65 with 5 semi-closed tines 0.60 m³ (1,415 kg).

Undercarriage		HR
Pad width	mm	750
Weight	kg	56,200
Ground pressure	kg/cm²	0.70

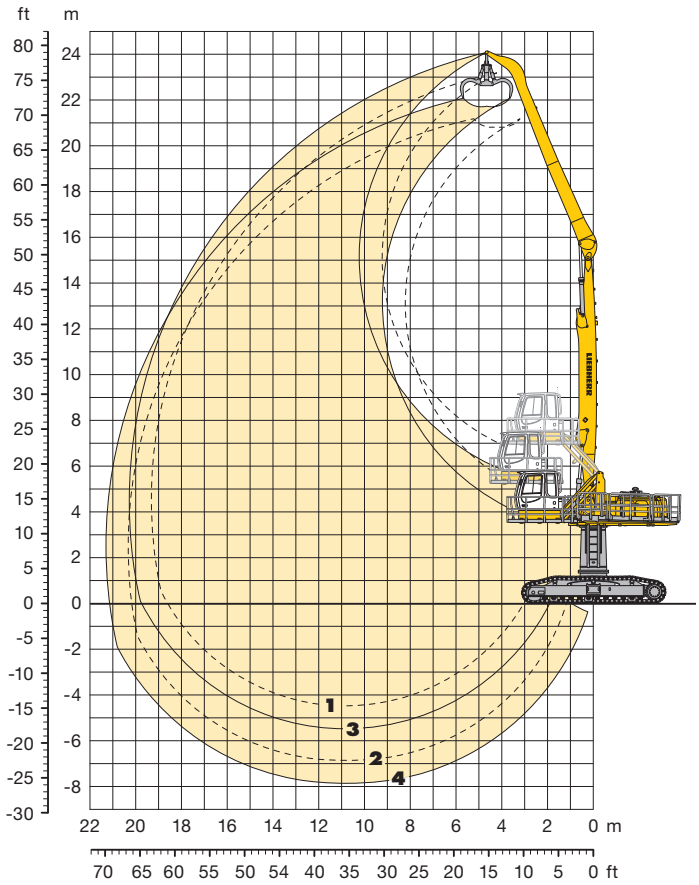

Attachment Envelope

Kinematic variants 3B

1	with industrial stick 9.00 m
2	with industrial stick 9.00 m and grapple model GM 65
3	with industrial stick 10.00 m
4	with industrial stick 10.00 m and grapple model GM 65

Operating Weight and Ground Pressure

Operating weight includes basic machine with hydraulic cab elevation + intermediate piece 0.5 m, counterweight 7.5 t, industrial-type straight mono boom 10.60 m, industrial stick 10.00 m and grapple model GM 65 with 5 semi-closed tines 0.60 m³ (1,415 kg).

Undercarriage		HR
Pad width	mm	750
Weight	kg	56,400
Ground pressure	kg/cm²	0.70

Lift Capacities

with Industrial-Type Straight Mono Boom 10.60 m

Industrial Stick 9.00 m (Variant 2A)

m	Under-carriage	3.0 m		4.5 m		6.0 m		7.5 m		9.0 m		10.5 m		12.0 m		13.5 m		15.0 m		16.5 m		18.0 m		19.5 m		m
24.0	HR																									
22.5	HR					6.1*	6.1*																			6.0
21.0	HR							6.2*	6.2*	5.1*	5.1*															9.4
19.5	HR									6.0*	6.0*	5.1*	5.1*													11.7
18.0	HR									6.4*	6.4*	5.9*	5.9*	5.0*	5.0*											13.5
16.5	HR											6.0*	6.0*	5.4*	5.4*	4.8*	4.8*									14.8
15.0	HR											6.0*	6.0*	5.4*	5.4*	4.8*	4.8*	4.3*	4.3*							16.0
13.5	HR											6.0*	6.0*	5.4*	5.4*	4.8*	4.8*	4.3*	4.3*	3.6*	3.6*					16.9
12.0	HR									6.9*	6.9*	6.0*	6.0*	5.4*	5.4*	4.8*	4.8*	4.3*	4.3*	3.8*	3.8*					17.6
10.5	HR									7.0*	7.0*	6.1*	6.1*	5.4*	5.4*	4.8*	4.8*	4.3*	4.3*	3.8*	3.8*	3.3*	3.3*			18.2
9.0	HR							7.4*	7.4*	7.2*	7.2*	6.2*	6.2*	5.5*	5.5*	4.8*	4.8*	4.3*	4.3*	3.8*	3.8*	3.3*	3.3*			18.6
7.5	HR					7.5*	7.5*	8.8*	8.8*	7.4*	7.4*	6.3*	6.3*	5.5*	5.5*	4.8*	4.8*	4.3*	4.3*	3.7*	3.7*	3.2*	3.2*			18.9
6.0	HR			10.8*	10.8*	11.4*	11.4*	9.1*	9.1*	7.5*	7.5*	6.4*	6.4*	5.5*	5.5*	4.8*	4.8*	4.2*	4.2*	3.7*	3.7*	3.1*	3.1*			19.1
4.5	HR			11.1*	11.1*	11.8*	11.8*	9.3*	9.3*	7.6*	7.6*	6.4*	6.4*	5.5*	5.5*	4.8*	4.8*	4.1*	4.1*	3.6*	3.6*	3.0*	3.0*			19.2
3.0	HR			3.1*	3.1*	11.7*	11.7*	9.2*	9.2*	7.5*	7.5*	6.3*	6.3*	5.4*	5.4*	4.6*	4.6*	4.0*	4.0*	3.4*	3.4*	2.8*	2.8*			19.1
1.5	HR	0.8*	0.8*	2.6*	2.6*	6.7*	6.7*	8.9*	8.9*	7.3*	7.3*	6.1*	6.1*	5.2*	5.2*	4.4*	4.4*	3.8*	3.8*	3.2*	3.2*	2.5*	2.5*			19.0
0	HR	1.5*	1.5*	2.9*	2.9*	5.7*	5.7*	8.2*	8.2*	6.8*	6.8*	5.7*	5.7*	4.9*	4.9*	4.1*	4.1*	3.5*	3.5*	2.8*	2.8*	2.1*	2.1*			18.6
-1.5	HR			3.5*	3.5*	5.7*	5.7*	7.3*	7.3*	6.1*	6.1*	5.2*	5.2*	4.4*	4.4*	3.7*	3.7*	3.0*	3.0*	2.3*	2.3*					17.5
-3.0	HR					6.2*	6.2*	6.0*	6.0*	5.2*	5.2*	4.4*	4.4*	3.7*	3.7*	3.1*	3.1*	2.4*	2.4*							15.9
-4.5	HR											3.5*	3.5*	2.9*	2.9*											12.3

Industrial Stick 10.00 m (Variant 2A)

m	Under-carriage	3.0 m		4.5 m		6.0 m		7.5 m		9.0 m		10.5 m		12.0 m		13.5 m		15.0 m		16.5 m		18.0 m		19.5 m		m
24.0	HR																									
22.5	HR							5.4*	5.4*																	8.7
21.0	HR									5.3*	5.3*	4.4*	4.4*													11.3
19.5	HR											5.2*	5.2*	4.4*	4.4*											13.3
18.0	HR											5.5*	5.5*	5.0*	5.0*	4.2*	4.2*									14.8
16.5	HR											5.7*	5.7*	5.2*	5.2*	4.7*	4.7*	3.9*	3.9*							16.1
15.0	HR											5.7*	5.7*	5.1*	5.1*	4.6*	4.6*	4.2*	4.2*	3.4*	3.4*					17.1
13.5	HR											5.7*	5.7*	5.1*	5.1*	4.6*	4.6*	4.2*	4.2*	3.7*	3.7*					18.0
12.0	HR											5.8*	5.8*	5.2*	5.2*	4.6*	4.6*	4.2*	4.2*	3.7*	3.7*	3.3*	3.3*			18.7
10.5	HR											5.9*	5.9*	5.2*	5.2*	4.7*	4.7*	4.2*	4.2*	3.7*	3.7*	3.3*	3.3*			19.2
9.0	HR									6.5*	6.5*	6.0*	6.0*	5.3*	5.3*	4.7*	4.7*	4.2*	4.2*	3.7*	3.7*	3.3*	3.3*	2.7*	2.7*	19.6
7.5	HR							6.5*	6.5*	7.1*	7.1*	6.1*	6.1*	5.3*	5.3*	4.7*	4.7*	4.2*	4.2*	3.7*	3.7*	3.2*	3.2*	2.7*	2.7*	19.9
6.0	HR					7.0*	7.0*	8.4*	8.4*	7.3*	7.3*	6.2*	6.2*	5.4*	5.4*	4.7*	4.7*	4.1*	4.1*	3.6*	3.6*	3.1*	3.1*	2.6*	2.6*	20.1
4.5	HR			15.4*	15.4*	11.4*	11.4*	9.0*	9.0*	7.4*	7.4*	6.3*	6.3*	5.4*	5.4*	4.7*	4.7*	4.1*	4.1*	3.6*	3.6*	3.0*	3.0*	2.5*	2.5*	20.2
3.0	HR	0.8*	0.8*	6.0*	6.0*	11.6*	11.6*	9.1*	9.1*	7.4*	7.4*	6.2*	6.2*	5.3*	5.3*	4.6*	4.6*	4.0*	4.0*	3.4*	3.4*	2.9*	2.9*	2.3*	2.3*	20.1
1.5	HR	0.9*	0.9*	3.2*	3.2*	9.4*	9.4*	8.9*	8.9*	7.3*	7.3*	6.1*	6.1*	5.2*	5.2*	4.5*	4.5*	3.8*	3.8*	3.2*	3.2*	2.7*	2.7*	2.0*	2.0*	20.0
0	HR	1.5*	1.5*	3.0*	3.0*	6.5*	6.5*	8.5*	8.5*	7.0*	7.0*	5.8*	5.8*	4.9*	4.9*	4.2*	4.2*	3.6*	3.6*	3.0*	3.0*	2.4*	2.4*	1.5*	1.5*	19.7
-1.5	HR	2.1*	2.1*	3.4*	3.4*	5.9*	5.9*	7.7*	7.7*	6.4*	6.4*	5.4*	5.4*	4.6*	4.6*	3.9*	3.9*	3.2*	3.2*	2.6*	2.6*	1.9*	1.9*			18.8
-3.0	HR			3.9*	3.9*	6.0*	6.0*	6.7*	6.7*	5.7*	5.7*	4.8*	4.8*	4.0*	4.0*	3.4*	3.4*	2.7*	2.7*	2.1*	2.1*					17.5
-4.5	HR							5.4*	5.4*	4.7*	4.7*	4.0*	4.0*	3.3*	3.3*	2.7*	2.7*	2.1*	2.1*							15.3

Height — Can be slewed through 360° — In longitudinal position of undercarriage — Max. reach — * Limited by hydr. capacity

The lift capacities are stated in metric tonnes (t) on the lifting gear's stick tip, and can be lifted 360° on firm, level supporting surface. Capacities are valid for 750 mm track flat pads. Indicated loads are based on ISO 10567 standard and do not exceed 75 % of tipping or 87 % of hydraulic capacity (indicated via *). Lifting capacity of the excavator is limited by machine stability, hydraulic capacity and maximum permissible load of the load hook.

According to European Standard, EN 474-5: In the European Union excavators have to be equipped with an overload warning device, a load diagram and automatic safety check valves on hoist cylinders and stick cylinder(s), when they are used for lifting operations which require the use of lifting accessories.

Lift Capacities

with Industrial-Type Straight Mono Boom 10.60 m

Industrial Stick 9.00 m (Variant 3B)

m	Under-carriage	3.0 m		4.5 m		6.0 m		7.5 m		9.0 m		10.5 m		12.0 m		13.5 m		15.0 m		16.5 m		18.0 m		19.5 m				
																												m
24.0	HR					6.4*	6.4*																			5.8*	5.8*	6.6
22.5	HR							6.3*	6.3*	5.3*	5.3*															4.5*	4.5*	9.8
21.0	HR									5.5*	5.5*	5.0*	5.0*	3.9*	3.9*											3.9*	3.9*	12.0
19.5	HR									5.2*	5.2*	4.8*	4.8*	4.5*	4.5*	3.8*	3.8*									3.5*	3.5*	13.7
18.0	HR											4.7*	4.7*	4.4*	4.4*	4.1*	4.1*	3.4*	3.4*							3.3*	3.3*	15.1
16.5	HR											4.6*	4.6*	4.3*	4.3*	4.1*	4.1*	3.9*	3.9*							3.1*	3.1*	16.2
15.0	HR											4.7*	4.7*	4.3*	4.3*	4.1*	4.1*	3.8*	3.8*	3.6*	3.6*					3.0*	3.0*	17.1
13.5	HR									5.2*	5.2*	4.8*	4.8*	4.4*	4.4*	4.1*	4.1*	3.8*	3.8*	3.6*	3.6*					2.9*	2.9*	17.8
12.0	HR									5.4*	5.4*	4.9*	4.9*	4.5*	4.5*	4.2*	4.2*	3.9*	3.9*	3.6*	3.6*	3.4*	3.4*			2.9*	2.9*	18.3
10.5	HR							6.5*	6.5*	5.7*	5.7*	5.1*	5.1*	4.7*	4.7*	4.3*	4.3*	3.9*	3.9*	3.7*	3.7*	3.4*	3.4*			2.9*	2.9*	18.8
9.0	HR					7.6*	7.6*	7.1*	7.1*	6.1*	6.1*	5.4*	5.4*	4.8*	4.8*	4.4*	4.4*	4.0*	4.0*	3.7*	3.7*	3.4*	3.4*			2.9*	2.9*	19.1
7.5	HR			12.6*	12.6*	9.6*	9.6*	7.7*	7.7*	6.5*	6.5*	5.7*	5.7*	5.0*	5.0*	4.5*	4.5*	4.1*	4.1*	3.7*	3.7*	3.4*	3.4*			2.9*	2.9*	19.2
6.0	HR			7.2*	7.2*	10.6*	10.6*	8.4*	8.4*	6.9*	6.9*	5.9*	5.9*	5.2*	5.2*	4.6*	4.6*	4.2*	4.2*	3.8*	3.8*	3.4*	3.4*			3.0*	3.0*	19.3
4.5	HR			2.7*	2.7*	9.9*	9.9*	8.9*	8.9*	7.3*	7.3*	6.1*	6.1*	5.3*	5.3*	4.7*	4.7*	4.2*	4.2*	3.8*	3.8*	3.4*	3.4*			3.0*	3.0*	19.2
3.0	HR	0.8*	0.8*	2.4*	2.4*	6.0*	6.0*	9.2*	9.2*	7.5*	7.5*	6.3*	6.3*	5.4*	5.4*	4.8*	4.8*	4.2*	4.2*	3.8*	3.8*	3.3*	3.3*			2.9*	2.9*	19.1
1.5	HR			2.8*	2.8*	5.4*	5.4*	9.3*	9.3*	7.6*	7.6*	6.4*	6.4*	5.5*	5.5*	4.8*	4.8*	4.2*	4.2*	3.7*	3.7*	3.2*	3.2*			2.9*	2.9*	18.6
0	HR			3.4*	3.4*	5.6*	5.6*	9.1*	9.1*	7.5*	7.5*	6.3*	6.3*	5.4*	5.4*	4.7*	4.7*	4.1*	4.1*	3.5*	3.5*					3.2*	3.2*	17.5
-1.5	HR					6.0*	6.0*	8.7*	8.7*	7.2*	7.2*	6.1*	6.1*	5.2*	5.2*	4.5*	4.5*	3.9*	3.9*							3.6*	3.6*	15.8
-3.0	HR																											
-4.5	HR																											

Industrial Stick 10.00 m (Variant 3B)

m	Under-carriage	3.0 m		4.5 m		6.0 m		7.5 m		9.0 m		10.5 m		12.0 m		13.5 m		15.0 m		16.5 m		18.0 m		19.5 m				
																												m
24.0	HR																									6.3*	6.3*	5.1
22.5	HR							5.6*	5.6*	4.5*	4.5*															4.3*	4.3*	9.2
21.0	HR									5.3*	5.3*	4.6*	4.6*													3.6*	3.6*	11.7
19.5	HR											4.6*	4.6*	4.3*	4.3*	3.3*	3.3*									3.2*	3.2*	13.6
18.0	HR											4.4*	4.4*	4.1*	4.1*	3.9*	3.9*	3.1*	3.1*							2.9*	2.9*	15.1
16.5	HR											4.3*	4.3*	4.0*	4.0*	3.8*	3.8*	3.6*	3.6*							2.7*	2.7*	16.3
15.0	HR											4.3*	4.3*	4.0*	4.0*	3.8*	3.8*	3.6*	3.6*	3.4*	3.4*					2.6*	2.6*	17.3
13.5	HR											4.3*	4.3*	4.0*	4.0*	3.8*	3.8*	3.5*	3.5*	3.4*	3.4*	2.8*	2.8*			2.5*	2.5*	18.2
12.0	HR											4.4*	4.4*	4.1*	4.1*	3.8*	3.8*	3.6*	3.6*	3.4*	3.4*	3.2*	3.2*			2.5*	2.5*	18.9
10.5	HR											4.5*	4.5*	4.2*	4.2*	3.9*	3.9*	3.6*	3.6*	3.4*	3.4*	3.2*	3.2*			2.4*	2.4*	19.4
9.0	HR									5.3*	5.3*	4.8*	4.8*	4.3*	4.3*	4.0*	4.0*	3.7*	3.7*	3.4*	3.4*	3.2*	3.2*	2.9*	2.9*	2.4*	2.4*	19.8
7.5	HR							6.5*	6.5*	5.6*	5.6*	5.0*	5.0*	4.5*	4.5*	4.1*	4.1*	3.8*	3.8*	3.5*	3.5*	3.2*	3.2*	3.0*	3.0*	2.4*	2.4*	20.1
6.0	HR			4.9*	4.9*	7.3*	7.3*	7.1*	7.1*	6.1*	6.1*	5.3*	5.3*	4.7*	4.7*	4.2*	4.2*	3.9*	3.9*	3.5*	3.5*	3.3*	3.3*	3.0*	3.0*	2.4*	2.4*	20.2
4.5	HR			13.3*	13.3*	9.8*	9.8*	7.8*	7.8*	6.5*	6.5*	5.6*	5.6*	4.9*	4.9*	4.4*	4.4*	4.0*	4.0*	3.6*	3.6*	3.3*	3.3*	3.0*	3.0*	2.5*	2.5*	20.3
3.0	HR	0.6*	0.6*	4.7*	4.7*	10.7*	10.7*	8.4*	8.4*	6.9*	6.9*	5.8*	5.8*	5.1*	5.1*	4.5*	4.5*	4.0*	4.0*	3.6*	3.6*	3.3*	3.3*	2.9*	2.9*	2.5*	2.5*	20.2
1.5	HR	0.9*	0.9*	2.9*	2.9*	8.1*	8.1*	8.8*	8.8*	7.2*	7.2*	6.0*	6.0*	5.2*	5.2*	4.6*	4.6*	4.1*	4.1*	3.6*	3.6*	3.3*	3.3*	2.9*	2.9*	2.6*	2.6*	20.1
0	HR	1.4*	1.4*	2.9*	2.9*	6.0*	6.0*	9.0*	9.0*	7.3*	7.3*	6.2*	6.2*	5.3*	5.3*	4.6*	4.6*	4.1*	4.1*	3.6*	3.6*	3.2*	3.2*	2.7*	2.7*	2.6*	2.6*	19.7
-1.5	HR	2.1*	2.1*	3.3*	3.3*	5.6*	5.6*	9.0*	9.0*	7.4*	7.4*	6.2*	6.2*	5.3*	5.3*	4.6*	4.6*	4.0*	4.0*	3.5*	3.5*	3.0*	3.0*			2.7*	2.7*	18.8
-3.0	HR			3.8*	3.8*	5.8*	5.8*	8.8*	8.8*	7.2*	7.2*	6.1*	6.1*	5.2*	5.2*	4.5*	4.5*	3.9*	3.9*	3.4*	3.4*					3.0*	3.0*	17.4
-4.5	HR							8.3*	8.3*	6.9*	6.9*	5.8*	5.8*	5.0*	5.0*	4.3*	4.3*	3.6*	3.6*							3.6*	3.6*	15.1

Height | Can be slewed through 360° | In longitudinal position of undercarriage | Max. reach | * Limited by hydr. capacity

The lift capacities are stated in metric tonnes (t) on the lifting gear's stick tip, and can be lifted 360° on firm, level supporting surface. Capacities are valid for 750 mm track flat pads. Indicated loads are based on ISO 10567 standard and do not exceed 75 % of tipping or 87 % of hydraulic capacity (indicated via *). Lifting capacity of the excavator is limited by machine stability, hydraulic capacity and maximum permissible load of the load hook.

According to European Standard, EN 474-5: In the European Union excavators have to be equipped with an overload warning device, a load diagram and automatic safety check valves on hoist cylinders and stick cylinder(s), when they are used for lifting operations which require the use of lifting accessories.

Industrial Attachment

with Industrial-Type Angled Mono Boom 9.60 m

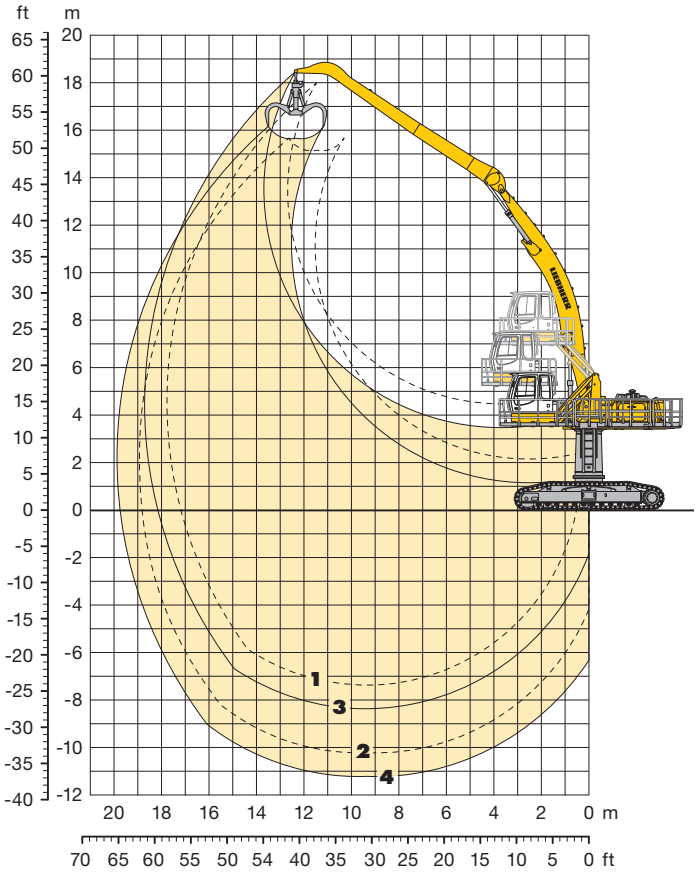

Attachment Envelope

Kinematic variant 3C

1 with industrial stick 9.00 m
2 with industrial stick 10.00 m
3 with industrial stick 9.00 m and grapple model GM 70C
4 with industrial stick 10.00 m and grapple model GM 70C

Operating Weight and Ground Pressure

Operating weight includes basic machine with hydraulic cab elevation + intermediate piece 0.5 m, counterweight 7.5 t, industrial-type angled mono boom 9.60 m, industrial stick 9.00 m and grapple model GM 70C with 5 semi-closed tines 0.80 m³ (1,705 kg).

Undercarriage		HR
Pad width	mm	750
Weight	kg	56,400
Ground pressure	kg/cm²	0.70

Operating weight includes basic machine with hydraulic cab elevation + intermediate piece 0.5 m, counterweight 7.5 t, industrial-type angled mono boom 9.60 m, industrial stick 10.00 m and grapple model GM 70C with 5 semi-closed tines 0.80 m³ (1,705 kg).

Undercarriage		HR
Pad width	mm	750
Weight	kg	56,600
Ground pressure	kg/cm²	0.70

Lift Capacities

with Industrial-Type Angled Mono Boom 9.60 m

Industrial Stick 9.00 m (Variant 3C)

m	Under-carriage	3.0 m		4.5 m		6.0 m		7.5 m		9.0 m		10.5 m		12.0 m		13.5 m		15.0 m		16.5 m		18.0 m		19.5 m				
																												m
18.0	HR																											
16.5	HR																									3.2*	3.2*	13.0
15.0	HR															3.5*	3.5*									3.1*	3.1*	14.3
13.5	HR															3.4*	3.4*	3.3*	3.3*							3.0*	3.0*	15.3
12.0	HR															3.4*	3.4*	3.4*	3.4*							2.9*	2.9*	16.1
10.5	HR															3.5*	3.5*	3.4*	3.4*	3.2*	3.2*					2.9*	2.9*	16.7
9.0	HR													3.8*	3.8*	3.6*	3.6*	3.5*	3.5*	3.4*	3.4*					2.9*	2.9*	17.2
7.5	HR											4.2*	4.2*	4.0*	4.0*	3.8*	3.8*	3.6*	3.6*	3.5*	3.5*					2.9*	2.9*	17.5
6.0	HR									5.1*	5.1*	4.6*	4.6*	4.3*	4.3*	4.0*	4.0*	3.8*	3.8*	3.6*	3.6*					3.0*	3.0*	17.7
4.5	HR	17.3*	17.3*	11.0*	11.0*	8.3*	8.3*	6.7*	6.7*	5.8*	5.8*	5.1*	5.1*	4.6*	4.6*	4.2*	4.2*	3.9*	3.9*	3.7*	3.7*					3.1*	3.1*	17.8
3.0	HR	3.5*	3.5*	11.4*	11.4*	9.8*	9.8*	7.7*	7.7*	6.4*	6.4*	5.5*	5.5*	4.9*	4.9*	4.4*	4.4*	4.1*	4.1*	3.8*	3.8*					3.2*	3.2*	17.7
1.5	HR	3.0*	3.0*	6.3*	6.3*	10.9*	10.9*	8.4*	8.4*	6.9*	6.9*	5.9*	5.9*	5.2*	5.2*	4.6*	4.6*	4.2*	4.2*	3.9*	3.9*					3.4*	3.4*	17.5
0	HR	3.4*	3.4*	5.6*	5.6*	10.4*	10.4*	9.0*	9.0*	7.4*	7.4*	6.2*	6.2*	5.4*	5.4*	4.8*	4.8*	4.3*	4.3*	3.9*	3.9*					3.6*	3.6*	17.2
-1.5	HR	3.9*	3.9*	5.6*	5.6*	9.1*	9.1*	9.4*	9.4*	7.7*	7.7*	6.5*	6.5*	5.6*	5.6*	4.9*	4.9*	4.4*	4.4*	3.9*	3.9*					3.9*	3.9*	16.7
-3.0	HR	4.4*	4.4*	5.9*	5.9*	8.8*	8.8*	9.6*	9.6*	7.8*	7.8*	6.6*	6.6*	5.7*	5.7*	5.0*	5.0*	4.4*	4.4*							3.9*	3.9*	16.1
-4.5	HR	4.9*	4.9*	6.4*	6.4*	9.0*	9.0*	9.5*	9.5*	7.8*	7.8*	6.6*	6.6*	5.6*	5.6*	4.9*	4.9*	4.2*	4.2*							4.0*	4.0*	15.3
-6.0	HR					9.5*	9.5*	9.1*	9.1*	7.5*	7.5*	6.3*	6.3*	5.4*	5.4*	4.5*	4.5*									4.2*	4.2*	14.1
-7.5	HR																											

Industrial Stick 10.00 m (Variant 3C)

m	Under-carriage	3.0 m		4.5 m		6.0 m		7.5 m		9.0 m		10.5 m		12.0 m		13.5 m		15.0 m		16.5 m		18.0 m		19.5 m				
																												m
18.0	HR																									2.9*	2.9*	12.9
16.5	HR															3.2*	3.2*									2.7*	2.7*	14.3
15.0	HR																	3.1*	3.1*							2.6*	2.6*	15.5
13.5	HR																	3.0*	3.0*							2.5*	2.5*	16.4
12.0	HR																	3.0*	3.0*	3.0*	3.0*					2.4*	2.4*	17.2
10.5	HR															3.1*	3.1*	3.1*	3.1*	3.0*	3.0*					2.4*	2.4*	17.7
9.0	HR															3.2*	3.2*	3.2*	3.2*	3.1*	3.1*	2.7*	2.7*			2.4*	2.4*	18.2
7.5	HR													3.6*	3.6*	3.4*	3.4*	3.3*	3.3*	3.2*	3.2*	3.1*	3.1*			2.4*	2.4*	18.5
6.0	HR											4.1*	4.1*	3.9*	3.9*	3.6*	3.6*	3.4*	3.4*	3.3*	3.3*	3.2*	3.2*			2.5*	2.5*	18.7
4.5	HR									5.1*	5.1*	4.6*	4.6*	4.2*	4.2*	3.9*	3.9*	3.6*	3.6*	3.4*	3.4*	3.2*	3.2*			2.6*	2.6*	18.7
3.0	HR	7.6*	7.6*	11.8*	11.8*	8.6*	8.6*	6.9*	6.9*	5.8*	5.8*	5.0*	5.0*	4.5*	4.5*	4.1*	4.1*	3.8*	3.8*	3.5*	3.5*	3.3*	3.3*			2.7*	2.7*	18.7
1.5	HR	3.6*	3.6*	8.9*	8.9*	10.0*	10.0*	7.8*	7.8*	6.4*	6.4*	5.5*	5.5*	4.8*	4.8*	4.3*	4.3*	3.9*	3.9*	3.6*	3.6*	3.4*	3.4*			2.8*	2.8*	18.5
0	HR	3.4*	3.4*	6.2*	6.2*	11.0*	11.0*	8.5*	8.5*	6.9*	6.9*	5.9*	5.9*	5.1*	5.1*	4.5*	4.5*	4.1*	4.1*	3.7*	3.7*	3.3*	3.3*			3.0*	3.0*	18.2
-1.5	HR	3.7*	3.7*	5.7*	5.7*	9.9*	9.9*	9.0*	9.0*	7.3*	7.3*	6.2*	6.2*	5.3*	5.3*	4.7*	4.7*	4.2*	4.2*	3.8*	3.8*					3.2*	3.2*	17.7
-3.0	HR	4.1*	4.1*	5.8*	5.8*	9.0*	9.0*	9.3*	9.3*	7.6*	7.6*	6.4*	6.4*	5.5*	5.5*	4.8*	4.8*	4.2*	4.2*	3.8*	3.8*					3.5*	3.5*	17.1
-4.5	HR	4.5*	4.5*	6.0*	6.0*	8.8*	8.8*	9.4*	9.4*	7.6*	7.6*	6.4*	6.4*	5.5*	5.5*	4.8*	4.8*	4.2*	4.2*							3.6*	3.6*	16.4
-6.0	HR	4.9*	4.9*	6.4*	6.4*	9.0*	9.0*	9.2*	9.2*	7.5*	7.5*	6.3*	6.3*	5.4*	5.4*	4.6*	4.6*	4.0*	4.0*							3.7*	3.7*	15.5
-7.5	HR					9.6*	9.6*	8.7*	8.7*	7.2*	7.2*	6.0*	6.0*	5.1*	5.1*											4.3*	4.3*	13.4

Height | Can be slewed through 360° | In longitudinal position of undercarriage | Max. reach | * Limited by hydr. capacity

The lift capacities are stated in metric tonnes (t) on the lifting gear's stick tip, and can be lifted 360° on firm, level supporting surface. Capacities are valid for 750 mm track flat pads. Indicated loads are based on ISO 10567 standard and do not exceed 75 % of tipping or 87 % of hydraulic capacity (indicated via *). Lifting capacity of the excavator is limited by machine stability, hydraulic capacity and maximum permissible load of the load hook.

According to European Standard, EN 474-5: In the European Union excavators have to be equipped with an overload warning device, a load diagram and automatic safety check valves on hoist cylinders and stick cylinder(s), when they are used for lifting operations which require the use of lifting accessories.

The Right Attachment for Every Application

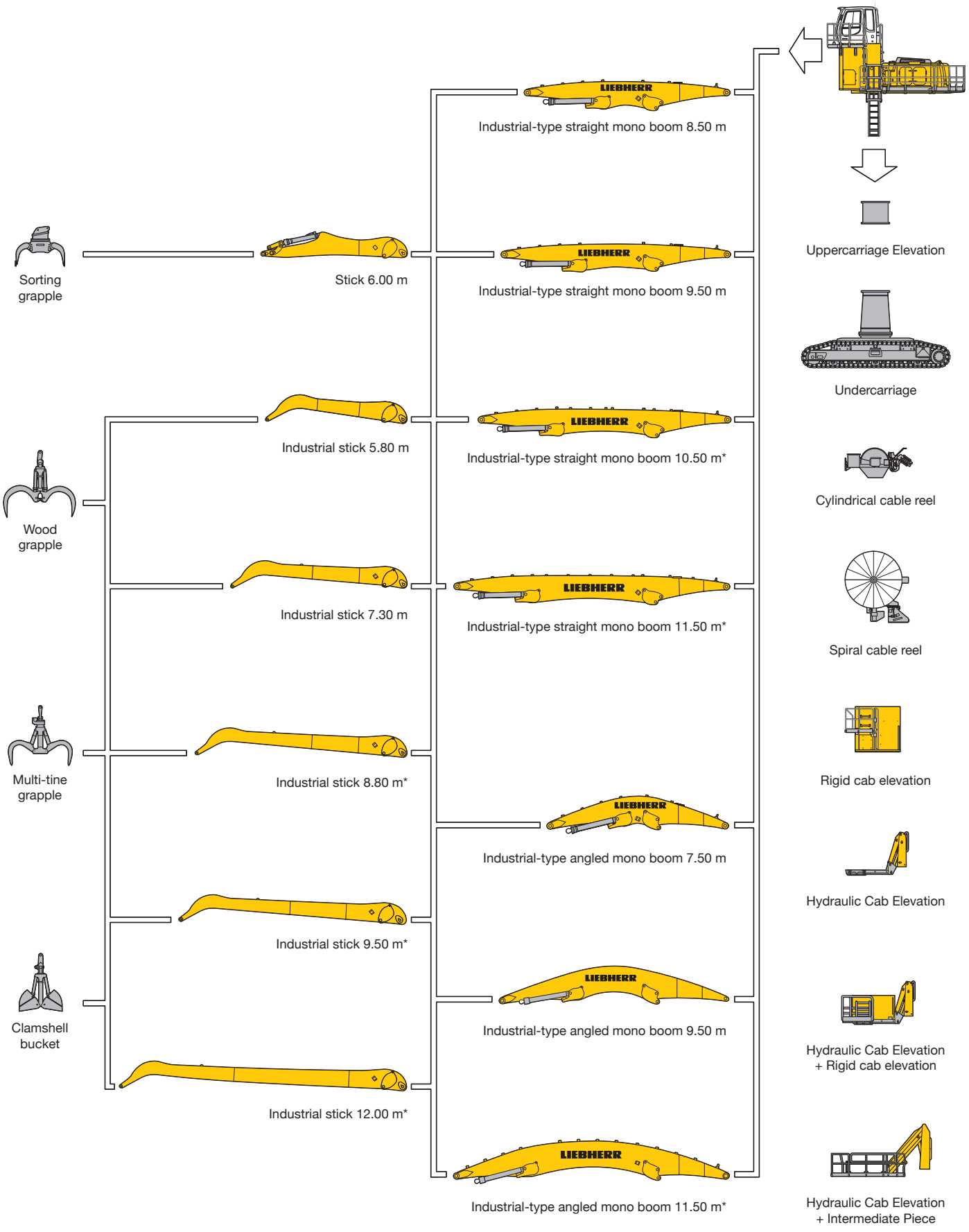

* presented configurations

Dimensions

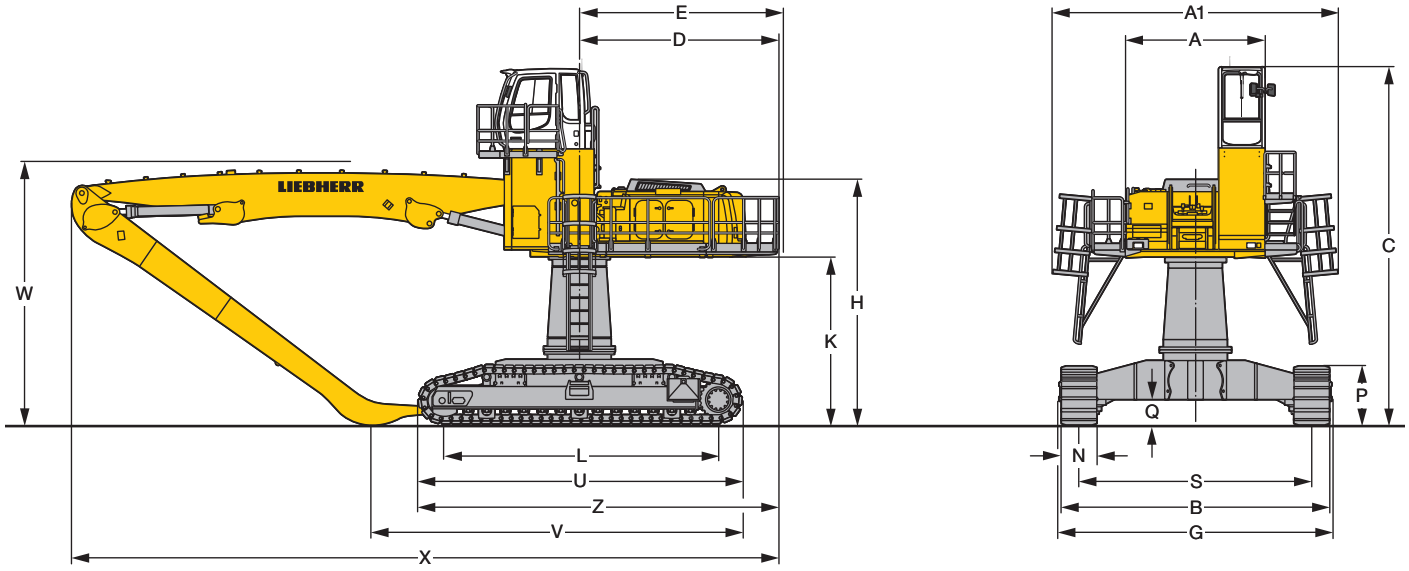

		mm
A		3,070
A1		6,150
C	with Rigid Cab Elevation 2 m	7,700
C	with Hydraulic Cab Elevation Parallelogram + Intermediate Piece 0,5 m	6,170
D		4,250
E		4,350
F		4,100
H	with Rigid Cab Elevation 2 m	5,300
H	with Hydraulic Cab Elevation Parallelogram + Intermediate Piece 0,5 m	6,170
K		3,600
L		6,000
P		1,280
Q		555
S		5,000
U		7,000
Z		7,750
N		750
B		5,830
G		5,860

E = Tail radius

Industrial-Type Straight Mono Boom 10.50 m and Industrial Stick	m	8.80	9.50
V	mm	8,000	7,150
W	mm	5,700	5,700
X	mm	15,250	15,250

Industrial-Type Straight Mono Boom 11.50 m and Industrial Stick	m	9.50	12.00
V	mm	8,150	*
W	mm	5,700	5,700
X	mm	16,250	16,250

Industrial-Type Angled Mono Boom 11.50 m and Industrial Stick	m	9.50	12.00
V	mm	7,400	*
W	mm	5,950	5,950
X	mm	16,100	16,100

* = without stick

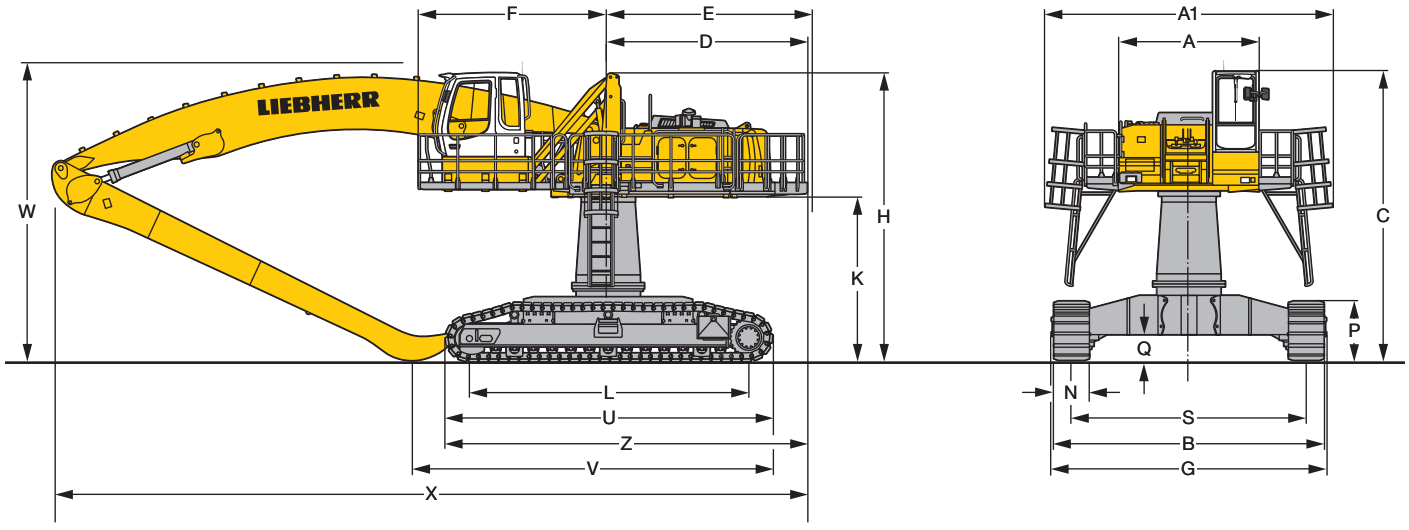

Industrial Attachment

with Industrial-Type Straight Mono Boom 10.50 m

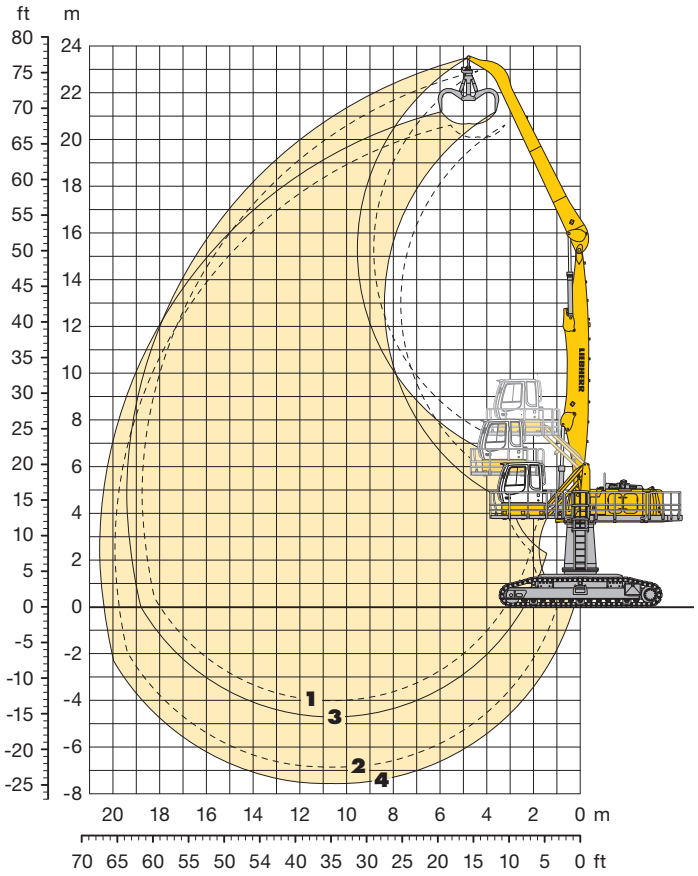

Attachment Envelope

Kinematic variants 2A

1 with industrial stick 8.80 m
2 with industrial stick 8.80 m and grapple model GM 70C
3 with industrial stick 9.50 m
4 with industrial stick 9.50 m and grapple model GM 70C

Operating Weight and Ground Pressure

Operating weight includes basic machine with hydraulic cab elevation + intermediate piece 0.5 m, counterweight 11.0 t, industrial-type straight mono boom 10.50 m, industrial stick 8.80 m and grapple model GM 70C with 5 semi-closed tines 1.10 m³ (1,860 kg).

Undercarriage		HR
Pad width	mm	750
Weight	kg	73,400
Ground pressure	kg/cm²	0.82

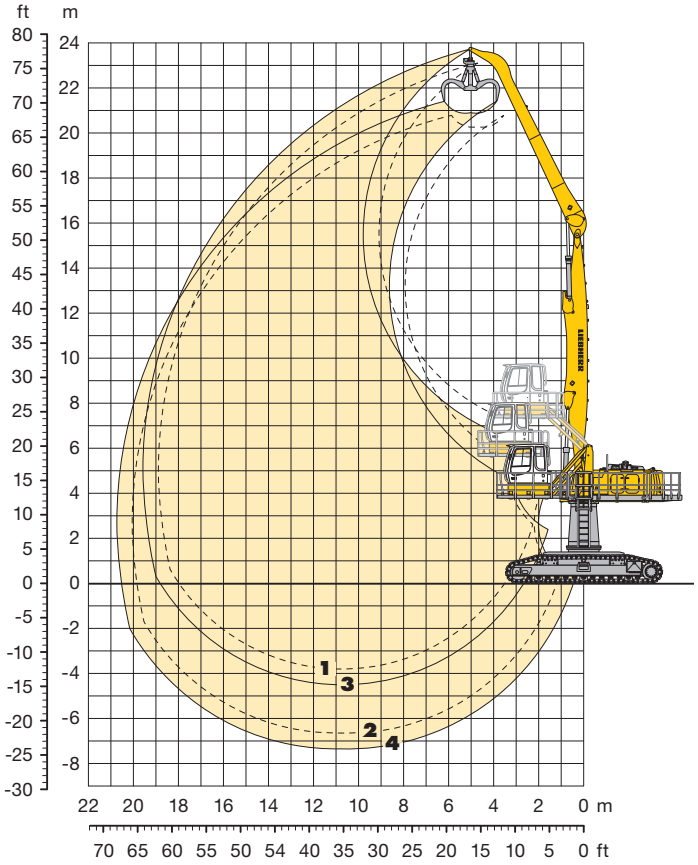

Attachment Envelope

Kinematic variants 3B

1 with industrial stick 8.80 m
2 with industrial stick 8.80 m and grapple model GM 70C
3 with industrial stick 9.50 m
4 with industrial stick 9.50 m and grapple model GM 70C

Operating Weight and Ground Pressure

Operating weight includes basic machine with hydraulic cab elevation + intermediate piece 0.5 m, counterweight 11.0 t, industrial-type straight mono boom 10.50 m, industrial stick 9.50 m and grapple model GM 70C with 5 semi-closed tines 1.10 m³ (1,860 kg).

Undercarriage		HR
Pad width	mm	750
Weight	kg	73,600
Ground pressure	kg/cm²	0.82

Lift Capacities

with Industrial-Type Straight Mono Boom 10.50 m

Industrial Stick 8.80 m (Variant 2A)

m	Under-carriage	3.0 m		4.5 m		6.0 m		7.5 m		9.0 m		10.5 m		12.0 m		13.5 m		15.0 m		16.5 m		18.0 m		19.5 m		21.0 m		22.5 m				m
25.5	HR																													
24.0	HR																													
22.5	HR																											9.7*	9.7*	5.9
21.0	HR							9.7*	9.7*	8.0*	8.0*																	7.5*	7.5*	9.3
19.5	HR									9.5*	9.5*	8.1*	8.1*															6.5*	6.5*	11.6
18.0	HR									10.1*	10.1*	9.2*	9.2*	7.9*	7.9*													5.9*	5.9*	13.3
16.5	HR									10.4*	10.4*	9.5*	9.5*	8.5*	8.5*	7.5*	7.5*											5.6*	5.6*	14.6
15.0	HR									10.5*	10.5*	9.4*	9.4*	8.5*	8.5*	7.7*	7.7*	6.7*	6.7*									5.3*	5.3*	15.7
13.5	HR									10.6*	10.6*	9.4*	9.4*	8.5*	8.5*	7.7*	7.7*	6.9*	6.9*	5.4*	5.4*							5.2*	5.2*	16.6
12.0	HR									10.8*	10.8*	9.5*	9.5*	8.5*	8.5*	7.7*	7.7*	6.9*	6.9*	6.2*	6.2*							5.1*	5.1*	17.3
10.5	HR							11.3*	11.3*	11.0*	11.0*	9.7*	9.7*	8.6*	8.6*	7.7*	7.7*	6.9*	6.9*	6.1*	6.1*							5.0*	5.0*	17.9
9.0	HR							12.6*	12.6*	11.4*	11.4*	9.9*	9.9*	8.7*	8.7*	7.7*	7.7*	6.9*	6.9*	6.1*	6.1*	5.2*	5.2*					5.0*	5.0*	18.3
7.5	HR			10.6*	10.6*	13.9*	13.9*	13.9*	13.9*	11.7*	11.7*	10.1*	10.1*	8.8*	8.8*	7.8*	7.8*	6.9*	6.9*	6.0*	6.0*	5.1*	5.1*					4.7*	4.7*	18.6
6.0	HR	37.3*	37.3*	24.4*	24.4*	18.1*	18.1*	14.4*	14.4*	12.0*	12.0*	10.2*	10.2*	8.8*	8.8*	7.7*	7.7*	6.8*	6.8*	5.9*	5.9*	5.0*	5.0*					4.4*	4.4*	18.7
4.5	HR			9.9*	9.9*	18.7*	18.7*	14.7*	14.7*	12.1*	12.1*	10.2*	10.2*	8.8*	8.8*	7.6*	7.6*	6.6*	6.6*	5.7*	5.7*	4.7*	4.7*					4.1*	4.1*	18.8
3.0	HR	0.9*	0.9*	4.9*	4.9*	15.8*	15.8*	14.6*	14.6*	12.0*	12.0*	10.1*	10.1*	8.6*	8.6*	7.4*	7.4*	6.4*	6.4*	5.4*	5.4*	4.3*	4.3*					3.7*	3.7*	18.7
1.5	HR	2.0*	2.0*	4.7*	4.7*	10.7*	10.7*	14.0*	14.0*	11.5*	11.5*	9.7*	9.7*	8.2*	8.2*	7.1*	7.1*	6.0*	6.0*	5.0*	5.0*	3.8*	3.8*					3.3*	3.3*	18.5
0	HR			5.4*	5.4*	9.8*	9.8*	12.8*	12.8*	10.7*	10.7*	9.0*	9.0*	7.7*	7.7*	6.5*	6.5*	5.4*	5.4*	4.4*	4.4*							3.0*	3.0*	18.0
-1.5	HR			6.4*	6.4*	10.1*	10.1*	11.2*	11.2*	9.5*	9.5*	8.1*	8.1*	6.9*	6.9*	5.7*	5.7*	4.7*	4.7*	3.5*	3.5*							3.2*	3.2*	16.8
-3.0	HR							9.1*	9.1*	7.9*	7.9*	6.8*	6.8*	5.7*	5.7*	4.7*	4.7*											3.8*	3.8*	14.7
-4.5	HR																													
-6.0	HR																													

Industrial Stick 9.50 m (Variant 2A)

m	Under-carriage	3.0 m		4.5 m		6.0 m		7.5 m		9.0 m		10.5 m		12.0 m		13.5 m		15.0 m		16.5 m		18.0 m		19.5 m		21.0 m		22.5 m				m
25.5	HR																													
24.0	HR																													
22.5	HR							8.3*	8.3*																			7.8*	7.8*	7.8
21.0	HR									8.4*	8.4*	6.6*	6.6*															6.4*	6.4*	10.6
19.5	HR									9.2*	9.2*	8.2*	8.2*	6.7*	6.7*													5.7*	5.7*	12.6
18.0	HR											8.9*	8.9*	7.9*	7.9*	6.4*	6.4*											5.3*	5.3*	14.2
16.5	HR											9.1*	9.1*	8.3*	8.3*	7.5*	7.5*	5.9*	5.9*									5.0*	5.0*	15.5
15.0	HR											9.1*	9.1*	8.2*	8.2*	7.5*	7.5*	6.8*	6.8*	4.8*	4.8*							4.8*	4.8*	16.5
13.5	HR											9.1*	9.1*	8.2*	8.2*	7.5*	7.5*	6.8*	6.8*	6.1*	6.1*							4.6*	4.6*	17.4
12.0	HR									10.1*	10.1*	9.2*	9.2*	8.3*	8.3*	7.5*	7.5*	6.8*	6.8*	6.1*	6.1*	4.7*	4.7*					4.5*	4.5*	18.0
10.5	HR									10.6*	10.6*	9.4*	9.4*	8.4*	8.4*	7.5*	7.5*	6.8*	6.8*	6.1*	6.1*	5.3*	5.3*					4.5*	4.5*	18.6
9.0	HR							10.6*	10.6*	11.0*	11.0*	9.6*	9.6*	8.5*	8.5*	7.6*	7.6*	6.8*	6.8*	6.0*	6.0*	5.3*	5.3*					4.5*	4.5*	19.0
7.5	HR					10.5*	10.5*	12.6*	12.6*	11.4*	11.4*	9.8*	9.8*	8.6*	8.6*	7.6*	7.6*	6.8*	6.8*	6.0*	6.0*	5.2*	5.2*					4.4*	4.4*	19.2
6.0	HR	7.8*	7.8*	13.8*	13.8*	16.8*	16.8*	14.1*	14.1*	11.7*	11.7*	10.0*	10.0*	8.7*	8.7*	7.6*	7.6*	6.7*	6.7*	5.9*	5.9*	5.1*	5.1*					4.1*	4.1*	19.4
4.5	HR			24.9*	24.9*	18.3*	18.3*	14.5*	14.5*	11.9*	11.9*	10.1*	10.1*	8.7*	8.7*	7.6*	7.6*	6.6*	6.6*	5.7*	5.7*	4.9*	4.9*					3.8*	3.8*	19.4
3.0	HR	1.4*	1.4*	6.6*	6.6*	18.5*	18.5*	14.5*	14.5*	11.9*	11.9*	10.0*	10.0*	8.6*	8.6*	7.4*	7.4*	6.4*	6.4*	5.5*	5.5*	4.6*	4.6*					3.5*	3.5*	19.4
1.5	HR	2.1*	2.1*	5.2*	5.2*	12.6*	12.6*	14.1*	14.1*	11.6*	11.6*	9.7*	9.7*	8.3*	8.3*	7.1*	7.1*	6.1*	6.1*	5.1*	5.1*	4.1*	4.1*					3.1*	3.1*	19.2
0	HR	3.1*	3.1*	5.5*	5.5*	10.4*	10.4*	13.2*	13.2*	10.9*	10.9*	9.2*	9.2*	7.8*	7.8*	6.7*	6.7*	5.6*	5.6*	4.6*	4.6*	3.5*	3.5*					2.7*	2.7*	18.8
-1.5	HR			6.3*	6.3*	10.1*	10.1*	11.8*	11.8*	9.9*	9.9*	8.4*	8.4*	7.1*	7.1*	6.0*	6.0*	5.0*	5.0*	3.9*	3.9*							2.9*	2.9*	17.7
-3.0	HR					10.6*	10.6*	10.0*	10.0*	8.5*	8.5*	7.3*	7.3*	6.1*	6.1*	5.1*	5.1*	4.1*	4.1*									3.3*	3.3*	16.0
-4.5	HR									6.7*	6.7*	5.8*	5.8*	4.8*	4.8*													4.4*	4.4*	12.6
-6.0	HR																													

Height | Can be slewed through 360° | In longitudinal position of undercarriage | Max. reach | * Limited by hydr. capacity

The lift capacities are stated in metric tonnes (t) on the lifting gear's stick tip, and can be lifted 360° on firm, level supporting surface. Capacities are valid for 750 mm track flat pads. Indicated loads are based on ISO 10567 standard and do not exceed 75 % of tipping or 87 % of hydraulic capacity (indicated via *). Lifting capacity of the excavator is limited by machine stability, hydraulic capacity and maximum permissible load of the load hook.

According to European Standard, EN 474-5: In the European Union excavators have to be equipped with an overload warning device, a load diagram and automatic safety check valves on hoist cylinders and stick cylinder(s), when they are used for lifting operations which require the use of lifting accessories.

Lift Capacities

with Industrial-Type Straight Mono Boom 10.50 m

Industrial Stick 8.80 m (Variant 3B)

m	Under-carriage	3.0 m		4.5 m		6.0 m		7.5 m		9.0 m		10.5 m		12.0 m		13.5 m		15.0 m		16.5 m		18.0 m		19.5 m		21.0 m		22.5 m				
																																m
25.5	HR																															
24.0	HR																															
22.5	HR					10.2*	10.2*																							9.2*	9.2*	6.7
21.0	HR							10.0*	10.0*	8.5*	8.5*																			7.3*	7.3*	9.8
19.5	HR									8.7*	8.7*	8.1*	8.1*																	6.4*	6.4*	12.0
18.0	HR									8.3*	8.3*	7.8*	7.8*	7.3*	7.3*	6.1*	6.1*													5.9*	5.9*	13.6
16.5	HR											7.6*	7.6*	7.1*	7.1*	6.8*	6.8*													5.5*	5.5*	14.9
15.0	HR											7.5*	7.5*	7.1*	7.1*	6.7*	6.7*	6.4*	6.4*											5.3*	5.3*	16.0
13.5	HR									8.2*	8.2*	7.6*	7.6*	7.1*	7.1*	6.7*	6.7*	6.4*	6.4*	6.0*	6.0*									5.1*	5.1*	16.8
12.0	HR									8.5*	8.5*	7.8*	7.8*	7.2*	7.2*	6.8*	6.8*	6.4*	6.4*	6.1*	6.1*									5.0*	5.0*	17.5
10.5	HR									8.9*	8.9*	8.1*	8.1*	7.5*	7.5*	6.9*	6.9*	6.5*	6.5*	6.1*	6.1*	5.2*	5.2*							5.0*	5.0*	18.1
9.0	HR							10.8*	10.8*	9.5*	9.5*	8.5*	8.5*	7.7*	7.7*	7.1*	7.1*	6.6*	6.6*	6.1*	6.1*	5.7*	5.7*							5.0*	5.0*	18.5
7.5	HR			11.0*	11.0*	14.2*	14.2*	11.8*	11.8*	10.2*	10.2*	9.0*	9.0*	8.0*	8.0*	7.3*	7.3*	6.7*	6.7*	6.2*	6.2*	5.8*	5.8*							5.1*	5.1*	18.7
6.0	HR			21.8*	21.8*	16.2*	16.2*	13.0*	13.0*	10.9*	10.9*	9.4*	9.4*	8.4*	8.4*	7.5*	7.5*	6.9*	6.9*	6.3*	6.3*	5.8*	5.8*							5.1*	5.1*	18.9
4.5	HR			7.1*	7.1*	17.9*	17.9*	14.0*	14.0*	11.6*	11.6*	9.9*	9.9*	8.7*	8.7*	7.7*	7.7*	7.0*	7.0*	6.4*	6.4*	5.8*	5.8*							5.3*	5.3*	18.9
3.0	HR	0.8*	0.8*	4.3*	4.3*	13.0*	13.0*	14.8*	14.8*	12.1*	12.1*	10.3*	10.3*	8.9*	8.9*	7.9*	7.9*	7.1*	7.1*	6.4*	6.4*	5.7*	5.7*							5.3*	5.3*	18.8
1.5	HR	2.0*	2.0*	4.5*	4.5*	9.7*	9.7*	15.3*	15.3*	12.5*	12.5*	10.5*	10.5*	9.1*	9.1*	8.0*	8.0*	7.1*	7.1*	6.3*	6.3*	5.5*	5.5*							5.2*	5.2*	18.6
0	HR			5.3*	5.3*	9.2*	9.2*	15.3*	15.3*	12.6*	12.6*	10.6*	10.6*	9.1*	9.1*	8.0*	8.0*	7.0*	7.0*	6.2*	6.2*									5.2*	5.2*	18.0
-1.5	HR					9.7*	9.7*	15.0*	15.0*	12.4*	12.4*	10.4*	10.4*	9.0*	9.0*	7.8*	7.8*	6.8*	6.8*	5.8*	5.8*									5.7*	5.7*	16.7
-3.0	HR							14.2*	14.2*	11.8*	11.8*	10.0*	10.0*	8.6*	8.6*	7.4*	7.4*													6.8*	6.8*	14.4
-4.5	HR																															
-6.0	HR																															

Industrial Stick 9.50 m (Variant 3B)

m	Under-carriage	3.0 m		4.5 m		6.0 m		7.5 m		9.0 m		10.5 m		12.0 m		13.5 m		15.0 m		16.5 m		18.0 m		19.5 m		21.0 m		22.5 m				
																																m
25.5	HR																															
24.0	HR																															
22.5	HR							8.8*	8.8*																					7.6*	7.6*	8.4
21.0	HR									8.7*	8.7*	7.2*	7.2*																	6.3*	6.3*	11.1
19.5	HR									8.2*	8.2*	7.6*	7.6*	7.1*	7.1*															5.6*	5.6*	13.0
18.0	HR											7.3*	7.3*	6.9*	6.9*	6.6*	6.6*													5.2*	5.2*	14.5
16.5	HR											7.1*	7.1*	6.7*	6.7*	6.4*	6.4*	6.2*	6.2*											4.9*	4.9*	15.8
15.0	HR											7.1*	7.1*	6.7*	6.7*	6.4*	6.4*	6.1*	6.1*	5.3*	5.3*									4.7*	4.7*	16.8
13.5	HR											7.2*	7.2*	6.7*	6.7*	6.4*	6.4*	6.1*	6.1*	5.8*	5.8*									4.6*	4.6*	17.6
12.0	HR											7.4*	7.4*	6.9*	6.9*	6.5*	6.5*	6.1*	6.1*	5.8*	5.8*	5.2*	5.2*							4.5*	4.5*	18.3
10.5	HR									8.4*	8.4*	7.7*	7.7*	7.1*	7.1*	6.6*	6.6*	6.2*	6.2*	5.8*	5.8*	5.5*	5.5*							4.5*	4.5*	18.8
9.0	HR							10.0*	10.0*	8.9*	8.9*	8.1*	8.1*	7.4*	7.4*	6.8*	6.8*	6.3*	6.3*	5.9*	5.9*	5.5*	5.5*							4.5*	4.5*	19.2
7.5	HR					10.7*	10.7*	11.1*	11.1*	9.6*	9.6*	8.5*	8.5*	7.7*	7.7*	7.0*	7.0*	6.5*	6.5*	6.0*	6.0*	5.6*	5.6*							4.5*	4.5*	19.4
6.0	HR	10.5*	10.5*	16.4*	16.4*	15.1*	15.1*	12.2*	12.2*	10.4*	10.4*	9.0*	9.0*	8.0*	8.0*	7.3*	7.3*	6.6*	6.6*	6.1*	6.1*	5.6*	5.6*	4.8*	4.8*					4.6*	4.6*	19.6
4.5	HR			16.0*	16.0*	17.0*	17.0*	13.4*	13.4*	11.1*	11.1*	9.5*	9.5*	8.4*	8.4*	7.5*	7.5*	6.8*	6.8*	6.2*	6.2*	5.6*	5.6*	5.0*	5.0*					4.7*	4.7*	19.6
3.0	HR	1.2*	1.2*	5.5*	5.5*	18.4*	18.4*	14.3*	14.3*	11.7*	11.7*	10.0*	10.0*	8.7*	8.7*	7.7*	7.7*	6.9*	6.9*	6.2*	6.2*	5.6*	5.6*							4.9*	4.9*	19.5
1.5	HR	2.0*	2.0*	4.8*	4.8*	11.1*	11.1*	14.9*	14.9*	12.2*	12.2*	10.3*	10.3*	8.9*	8.9*	7.8*	7.8*	7.0*	7.0*	6.2*	6.2*	5.5*	5.5*							4.9*	4.9*	19.3
0	HR	3.1*	3.1*	5.3*	5.3*	9.7*	9.7*	15.1*	15.1*	12.4*	12.4*	10.4*	10.4*	9.0*	9.0*	7.8*	7.8*	6.9*	6.9*	6.1*	6.1*	5.4*	5.4*							4.8*	4.8*	18.8
-1.5	HR			6.2*	6.2*	9.7*	9.7*	15.0*	15.0*	12.3*	12.3*	10.4*	10.4*	8.9*	8.9*	7.8*	7.8*	6.8*	6.8*	5.9*	5.9*									5.2*	5.2*	17.7
-3.0	HR					10.3*	10.3*	14.4*	14.4*	11.9*	11.9*	10.1*	10.1*	8.6*	8.6*	7.5*	7.5*	6.5*	6.5*											5.9*	5.9*	15.9
-4.5	HR																													9.0*	9.0*	11.0
-6.0	HR																															

Height | Can be slewed through 360° | In longitudinal position of undercarriage | Max. reach | * Limited by hydr. capacity

The lift capacities are stated in metric tonnes (t) on the lifting gear's stick tip, and can be lifted 360° on firm, level supporting surface. Capacities are valid for 750 mm track flat pads. Indicated loads are based on ISO 10567 standard and do not exceed 75 % of tipping or 87 % of hydraulic capacity (indicated via *). Lifting capacity of the excavator is limited by machine stability, hydraulic capacity and maximum permissible load of the load hook.

According to European Standard, EN 474-5: In the European Union excavators have to be equipped with an overload warning device, a load diagram and automatic safety check valves on hoist cylinders and stick cylinder(s), when they are used for lifting operations which require the use of lifting accessories.

Industrial Attachment

with Industrial-Type Straight Mono Boom 11.50 m

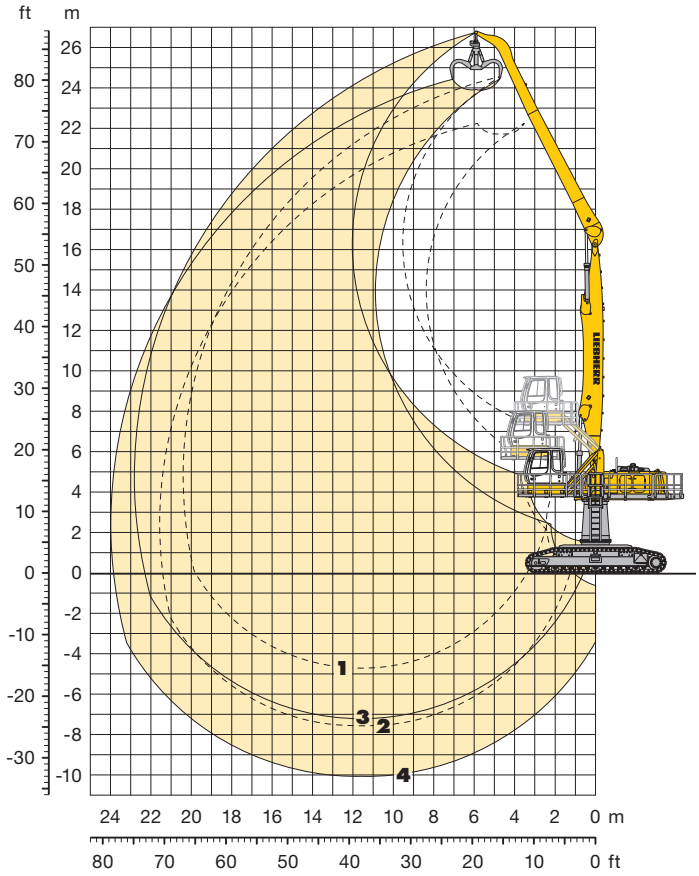

Attachment Envelope

Kinematic variants 2A

1 with industrial stick 9.50 m
2 with industrial stick 9.50 m and grapple model GM 70C
3 with industrial stick 12.00 m
4 with industrial stick 12.00 m and grapple model GM 70C

Operating Weight and Ground Pressure

Operating weight includes basic machine with hydraulic cab elevation + intermediate piece 0.5 m, counterweight 11.0 t, industrial-type straight mono boom 11.50 m, industrial stick 9.50 m and grapple model GM 70C with 5 semi-closed tines 0.80 m³ (1,705 kg).

Undercarriage		HR
Pad width	mm	750
Weight	kg	73,800
Ground pressure	kg/cm²	0.82

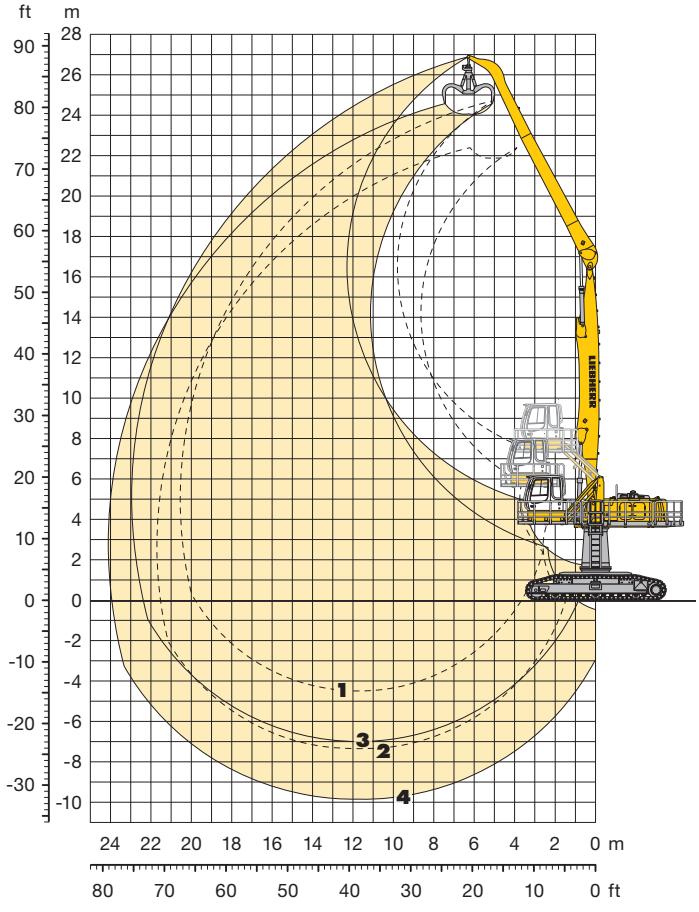

Attachment Envelope

Kinematic variants 3B

1 with industrial stick 9.50 m
2 with industrial stick 9.50 m and grapple model GM 70C
3 with industrial stick 12.00 m
4 with industrial stick 12.00 m and grapple model GM 70C

Operating Weight and Ground Pressure

Operating weight includes basic machine with hydraulic cab elevation + intermediate piece 0.5 m, counterweight 11.0 t, industrial-type straight mono boom 11.50 m, industrial stick 12.00 m and grapple model GM 70C with 5 semi-closed tines 0.80 m³ (1,705 kg).

Undercarriage		HR
Pad width	mm	750
Weight	kg	74,500
Ground pressure	kg/cm²	0.83

Lift Capacities

with Industrial-Type Straight Mono Boom 11.50 m

ER 944 C

Industrial Stick 9.50 m (Variant 2A)

m	Under-carriage	3.0 m		4.5 m		6.0 m		7.5 m		9.0 m		10.5 m		12.0 m		13.5 m		15.0 m		16.5 m		18.0 m		19.5 m		21.0 m		22.5 m				m
25.5	HR																															
24.0	HR					9.5*	9.5*																							8.7*	8.7*	6.7
22.5	HR							9.3*	9.3*	8.0*	8.0*																			6.8*	6.8*	10.0
21.0	HR									9.0*	9.0*	8.0*	8.0*	6.4*	6.4*															6.0*	6.0*	12.3
19.5	HR									9.4*	9.4*	8.8*	8.8*	7.8*	7.8*	6.3*	6.3*													5.4*	5.4*	14.1
18.0	HR											9.1*	9.1*	8.1*	8.1*	7.3*	7.3*	6.0*	6.0*											5.1*	5.1*	15.5
16.5	HR											9.0*	9.0*	8.1*	8.1*	7.2*	7.2*	6.5*	6.5*	5.2*	5.2*									4.9*	4.9*	16.7
15.0	HR											9.0*	9.0*	8.1*	8.1*	7.2*	7.2*	6.5*	6.5*	5.9*	5.9*									4.7*	4.7*	17.6
13.5	HR											9.1*	9.1*	8.1*	8.1*	7.2*	7.2*	6.5*	6.5*	5.8*	5.8*	5.2*	5.2*							4.6*	4.6*	18.4
12.0	HR									10.4*	10.4*	9.2*	9.2*	8.1*	8.1*	7.3*	7.3*	6.5*	6.5*	5.8*	5.8*	5.2*	5.2*							4.5*	4.5*	19.1
10.5	HR									10.8*	10.8*	9.3*	9.3*	8.2*	8.2*	7.3*	7.3*	6.5*	6.5*	5.8*	5.8*	5.1*	5.1*	4.4*	4.4*					4.3*	4.3*	19.6
9.0	HR							11.6*	11.6*	11.0*	11.0*	9.5*	9.5*	8.3*	8.3*	7.3*	7.3*	6.5*	6.5*	5.8*	5.8*	5.1*	5.1*	4.3*	4.3*					4.1*	4.1*	20.0
7.5	HR			10.0*	10.0*	13.3*	13.3*	13.6*	13.6*	11.3*	11.3*	9.6*	9.6*	8.3*	8.3*	7.3*	7.3*	6.5*	6.5*	5.7*	5.7*	5.0*	5.0*	4.2*	4.2*					3.8*	3.8*	20.2
6.0	HR			23.9*	23.9*	17.6*	17.6*	13.9*	13.9*	11.5*	11.5*	9.7*	9.7*	8.4*	8.4*	7.3*	7.3*	6.4*	6.4*	5.6*	5.6*	4.9*	4.9*	4.1*	4.1*					3.5*	3.5*	20.4
4.5	HR			4.9*	4.9*	17.8*	17.8*	14.0*	14.0*	11.5*	11.5*	9.6*	9.6*	8.3*	8.3*	7.2*	7.2*	6.2*	6.2*	5.4*	5.4*	4.7*	4.7*	3.8*	3.8*					3.2*	3.2*	20.4
3.0	HR			2.9*	2.9*	9.4*	9.4*	13.7*	13.7*	11.2*	11.2*	9.4*	9.4*	8.1*	8.1*	7.0*	7.0*	6.0*	6.0*	5.2*	5.2*	4.4*	4.4*	3.5*	3.5*					2.9*	2.9*	20.3
1.5	HR	1.1*	1.1*	3.1*	3.1*	7.1*	7.1*	13.0*	13.0*	10.7*	10.7*	9.1*	9.1*	7.7*	7.7*	6.6*	6.6*	5.7*	5.7*	4.9*	4.9*	4.0*	4.0*	3.1*	3.1*					2.5*	2.5*	20.1
0	HR			3.8*	3.8*	6.9*	6.9*	11.8*	11.8*	9.9*	9.9*	8.4*	8.4*	7.2*	7.2*	6.2*	6.2*	5.3*	5.3*	4.4*	4.4*	3.5*	3.5*	2.4*	2.4*					2.1*	2.1*	19.8
-1.5	HR			4.8*	4.8*	7.4*	7.4*	10.3*	10.3*	8.8*	8.8*	7.6*	7.6*	6.5*	6.5*	5.5*	5.5*	4.7*	4.7*	3.8*	3.8*	2.9*	2.9*							2.3*	2.3*	18.7
-3.0	HR							8.4*	8.4*	7.4*	7.4*	6.4*	6.4*	5.5*	5.5*	4.7*	4.7*	3.8*	3.8*	3.0*	3.0*									2.6*	2.6*	17.0
-4.5	HR											5.0*	5.0*	4.3*	4.3*	3.6*	3.6*													3.5*	3.5*	13.6
-6.0	HR																															

Industrial Stick 12.00 m (Variant 2A)

m	Under-carriage	3.0 m		4.5 m		6.0 m		7.5 m		9.0 m		10.5 m		12.0 m		13.5 m		15.0 m		16.5 m		18.0 m		19.5 m		21.0 m		22.5 m				m
25.5	HR									6.2*	6.2*																			5.8*	5.8*	9.4
24.0	HR											6.3*	6.3*	5.0*	5.0*															4.8*	4.8*	12.2
22.5	HR											6.9*	6.9*	6.1*	6.1*	5.1*	5.1*													4.2*	4.2*	14.3
21.0	HR													6.6*	6.6*	5.9*	5.9*	4.9*	4.9*											3.8*	3.8*	16.0
19.5	HR													6.9*	6.9*	6.4*	6.4*	5.7*	5.7*	4.6*	4.6*									3.6*	3.6*	17.4
18.0	HR													7.1*	7.1*	6.6*	6.6*	6.0*	6.0*	5.4*	5.4*	4.1*	4.1*							3.4*	3.4*	18.6
16.5	HR															6.5*	6.5*	5.9*	5.9*	5.4*	5.4*	4.9*	4.9*	3.4*	3.4*					3.3*	3.3*	19.6
15.0	HR													7.2*	7.2*	6.5*	6.5*	5.9*	5.9*	5.4*	5.4*	4.9*	4.9*	4.3*	4.3*					3.2*	3.2*	20.4
13.5	HR													7.3*	7.3*	6.6*	6.6*	5.9*	5.9*	5.4*	5.4*	4.9*	4.9*	4.4*	4.4*	3.2*	3.2*			3.1*	3.1*	21.1
12.0	HR													7.4*	7.4*	6.6*	6.6*	6.0*	6.0*	5.4*	5.4*	4.8*	4.8*	4.3*	4.3*	3.8*	3.8*			3.1*	3.1*	21.6
10.5	HR													7.5*	7.5*	6.7*	6.7*	6.0*	6.0*	5.4*	5.4*	4.8*	4.8*	4.3*	4.3*	3.8*	3.8*			3.1*	3.1*	22.1
9.0	HR											8.1*	8.1*	7.6*	7.6*	6.7*	6.7*	6.0*	6.0*	5.4*	5.4*	4.8*	4.8*	4.3*	4.3*	3.7*	3.7*			3.1*	3.1*	22.4
7.5	HR									8.1*	8.1*	8.8*	8.8*	7.7*	7.7*	6.8*	6.8*	6.0*	6.0*	5.4*	5.4*	4.8*	4.8*	4.2*	4.2*	3.6*	3.6*	3.0*	3.0*	2.9*	2.9*	22.7
6.0	HR							8.6*	8.6*	10.1*	10.1*	9.0*	9.0*	7.8*	7.8*	6.8*	6.8*	6.0*	6.0*	5.3*	5.3*	4.7*	4.7*	4.1*	4.1*	3.5*	3.5*	2.8*	2.8*	2.6*	2.6*	22.8
4.5	HR			9.0*	9.0*	12.1*	12.1*	13.2*	13.2*	10.8*	10.8*	9.2*	9.2*	7.9*	7.9*	6.8*	6.8*	6.0*	6.0*	5.3*	5.3*	4.6*	4.6*	4.0*	4.0*	3.4*	3.4*	2.6*	2.6*	2.4*	2.4*	22.8
3.0	HR	2.5*	2.5*	20.5*	20.5*	17.1*	17.1*	13.4*	13.4*	10.9*	10.9*	9.2*	9.2*	7.8*	7.8*	6.8*	6.8*	5.9*	5.9*	5.2*	5.2*	4.5*	4.5*	3.8*	3.8*	3.2*	3.2*	2.4*	2.4*	2.2*	2.2*	22.7
1.5	HR	1.6*	1.6*	5.5*	5.5*	17.0*	17.0*	13.3*	13.3*	10.8*	10.8*	9.1*	9.1*	7.7*	7.7*	6.6*	6.6*	5.7*	5.7*	5.0*	5.0*	4.3*	4.3*	3.6*	3.6*	2.9*	2.9*	2.0*	2.0*	1.9*	1.9*	22.6
0	HR	2.1*	2.1*	4.5*	4.5*	9.7*	9.7*	12.8*	12.8*	10.5*	10.5*	8.8*	8.8*	7.4*	7.4*	6.4*	6.4*	5.5*	5.5*	4.7*	4.7*	4.0*	4.0*	3.3*	3.3*	2.5*	2.5*			1.6*	1.6*	22.3
-1.5	HR	2.7*	2.7*	4.6*	4.6*	8.1*	8.1*	11.9*	11.9*	9.8*	9.8*	8.3*	8.3*	7.0*	7.0*	6.0*	6.0*	5.1*	5.1*	4.3*	4.3*	3.6*	3.6*	2.9*	2.9*	2.0*	2.0*			1.4*	1.4*	21.8
-3.0	HR	3.5*	3.5*	5.1*	5.1*	7.9*	7.9*	10.7*	10.7*	8.9*	8.9*	7.5*	7.5*	6.4*	6.4*	5.4*	5.4*	4.6*	4.6*	3.8*	3.8*	3.1*	3.1*	2.3*	2.3*					1.5*	1.5*	20.7
-4.5	HR			5.7*	5.7*	8.2*	8.2*	9.1*	9.1*	7.7*	7.7*	6.6*	6.6*	5.6*	5.6*	4.7*	4.7*	3.9*	3.9*	3.2*	3.2*	2.4*	2.4*							1.7*	1.7*	19.2
-6.0	HR							7.2*	7.2*	6.2*	6.2*	5.4*	5.4*	4.5*	4.5*	3.8*	3.8*	3.1*	3.1*	2.3*	2.3*									2.1*	2.1*	16.9

Height | Can be slewed through 360° | In longitudinal position of undercarriage | Max. reach | * Limited by hydr. capacity

The lift capacities are stated in metric tonnes (t) on the lifting gear's stick tip, and can be lifted 360° on firm, level supporting surface. Capacities are valid for 750 mm track flat pads. Indicated loads are based on ISO 10567 standard and do not exceed 75 % of tipping or 87 % of hydraulic capacity (indicated via *). Lifting capacity of the excavator is limited by machine stability, hydraulic capacity and maximum permissible load of the load hook.

According to European Standard, EN 474-5: In the European Union excavators have to be equipped with an overload warning device, a load diagram and automatic safety check valves on hoist cylinders and stick cylinder(s), when they are used for lifting operations which require the use of lifting accessories.

Lift Capacities

with Industrial-Type Straight Mono Boom 11.50 m

Industrial Stick 9.50 m (Variant 3B)

m	Under-carriage	3.0 m		4.5 m		6.0 m		7.5 m		9.0 m		10.5 m		12.0 m		13.5 m		15.0 m		16.5 m		18.0 m		19.5 m		21.0 m		22.5 m				m
25.5	HR																													
24.0	HR																													
22.5	HR									8.4*	8.4*	6.7*	6.7*																	
21.0	HR									8.3*	8.3*	7.6*	7.6*	6.9*	6.9*															
19.5	HR											7.3*	7.3*	6.7*	6.7*	6.3*	6.3*													
18.0	HR											7.1*	7.1*	6.6*	6.6*	6.2*	6.2*	5.8*	5.8*											
16.5	HR											7.0*	7.0*	6.5*	6.5*	6.1*	6.1*	5.7*	5.7*	5.5*	5.5*									
15.0	HR											7.1*	7.1*	6.5*	6.5*	6.1*	6.1*	5.7*	5.7*	5.4*	5.4*									
13.5	HR											7.2*	7.2*	6.6*	6.6*	6.1*	6.1*	5.7*	5.7*	5.4*	5.4*	5.1*	5.1*							
12.0	HR									8.2*	8.2*	7.4*	7.4*	6.8*	6.8*	6.2*	6.2*	5.8*	5.8*	5.4*	5.4*	5.1*	5.1*							
10.5	HR									8.6*	8.6*	7.7*	7.7*	7.0*	7.0*	6.4*	6.4*	5.9*	5.9*	5.5*	5.5*	5.1*	5.1*	4.8*	4.8*					
9.0	HR							10.5*	10.5*	9.1*	9.1*	8.0*	8.0*	7.2*	7.2*	6.6*	6.6*	6.0*	6.0*	5.6*	5.6*	5.2*	5.2*	4.8*	4.8*					
7.5	HR			10.6*	10.6*	14.1*	14.1*	11.5*	11.5*	9.7*	9.7*	8.4*	8.4*	7.5*	7.5*	6.7*	6.7*	6.1*	6.1*	5.6*	5.6*	5.2*	5.2*	4.8*	4.8*					
6.0	HR			21.5*	21.5*	15.7*	15.7*	12.4*	12.4*	10.3*	10.3*	8.9*	8.9*	7.8*	7.8*	6.9*	6.9*	6.3*	6.3*	5.7*	5.7*	5.2*	5.2*	4.8*	4.8*					
4.5	HR			3.6*	3.6*	17.1*	17.1*	13.3*	13.3*	10.9*	10.9*	9.3*	9.3*	8.0*	8.0*	7.1*	7.1*	6.4*	6.4*	5.8*	5.8*	5.3*	5.3*	4.8*	4.8*					
3.0	HR			2.6*	2.6*	8.0*	8.0*	13.9*	13.9*	11.3*	11.3*	9.6*	9.6*	8.3*	8.3*	7.3*	7.3*	6.5*	6.5*	5.8*	5.8*	5.3*	5.3*	4.7*	4.7*					
1.5	HR	1.1*	1.1*	3.0*	3.0*	6.5*	6.5*	14.2*	14.2*	11.6*	11.6*	9.8*	9.8*	8.4*	8.4*	7.4*	7.4*	6.5*	6.5*	5.8*	5.8*	5.2*	5.2*	4.6*	4.6*					
0	HR			3.8*	3.8*	6.6*	6.6*	12.1*	12.1*	11.7*	11.7*	9.8*	9.8*	8.4*	8.4*	7.4*	7.4*	6.5*	6.5*	5.8*	5.8*	5.1*	5.1*	4.4*	4.4*					
-1.5	HR					7.2*	7.2*	11.6*	11.6*	11.5*	11.5*	9.7*	9.7*	8.3*	8.3*	7.3*	7.3*	6.4*	6.4*	5.6*	5.6*	4.9*	4.9*							
-3.0	HR							11.9*	11.9*	11.0*	11.0*	9.4*	9.4*	8.1*	8.1*	7.0*	7.0*	6.1*	6.1*	5.3*	5.3*									
-4.5	HR																													
-6.0	HR																													

Industrial Stick 12.00 m (Variant 3B)

m	Under-carriage	3.0 m		4.5 m		6.0 m		7.5 m		9.0 m		10.5 m		12.0 m		13.5 m		15.0 m		16.5 m		18.0 m		19.5 m		21.0 m		22.5 m				m
25.5	HR									6.5*	6.5*																			
24.0	HR											6.5*	6.5*	5.4*	5.4*															
22.5	HR													5.9*	5.9*	5.3*	5.3*													
21.0	HR													5.7*	5.7*	5.3*	5.3*	5.1*	5.1*											
19.5	HR													5.5*	5.5*	5.2*	5.2*	4.9*	4.9*	4.7*	4.7*									
18.0	HR															5.1*	5.1*	4.8*	4.8*	4.6*	4.6*	4.4*	4.4*							
16.5	HR															5.0*	5.0*	4.8*	4.8*	4.5*	4.5*	4.3*	4.3*	3.7*	3.7*					
15.0	HR															5.0*	5.0*	4.8*	4.8*	4.5*	4.5*	4.3*	4.3*	4.1*	4.1*					
13.5	HR													5.4*	5.4*	5.1*	5.1*	4.8*	4.8*	4.5*	4.5*	4.3*	4.3*	4.0*	4.0*	3.6*	3.6*			
12.0	HR													5.6*	5.6*	5.2*	5.2*	4.9*	4.9*	4.6*	4.6*	4.3*	4.3*	4.1*	4.1*	3.8*	3.8*			
10.5	HR													5.8*	5.8*	5.4*	5.4*	5.0*	5.0*	4.6*	4.6*	4.4*	4.4*	4.1*	4.1*	3.8*	3.8*			
9.0	HR											6.6*	6.6*	6.1*	6.1*	5.6*	5.6*	5.1*	5.1*	4.7*	4.7*	4.4*	4.4*	4.1*	4.1*	3.9*	3.9*	3.3*	3.3*	
7.5	HR									8.0*	8.0*	7.1*	7.1*	6.4*	6.4*	5.8*	5.8*	5.3*	5.3*	4.9*	4.9*	4.5*	4.5*	4.2*	4.2*	3.9*	3.9*	3.6*	3.6*	
6.0	HR							8.8*	8.8*	8.6*	8.6*	7.5*	7.5*	6.7*	6.7*	6.0*	6.0*	5.4*	5.4*	5.0*	5.0*	4.6*	4.6*	4.2*	4.2*	3.9*	3.9*	3.6*	3.6*	
4.5	HR			11.3*	11.3*	13.8*	13.8*	11.2*	11.2*	9.3*	9.3*	8.0*	8.0*	7.0*	7.0*	6.2*	6.2*	5.6*	5.6*	5.1*	5.1*	4.7*	4.7*	4.3*	4.3*	3.9*	3.9*	3.5*	3.5*	
3.0	HR	1.7*	1.7*	11.6*	11.6*	15.6*	15.6*	12.1*	12.1*	9.9*	9.9*	8.4*	8.4*	7.3*	7.3*	6.5*	6.5*	5.8*	5.8*	5.2*	5.2*	4.7*	4.7*	4.3*	4.3*	3.9*	3.9*	3.5*	3.5*	
1.5	HR	1.4*	1.4*	4.7*	4.7*	13.7*	13.7*	12.9*	12.9*	10.5*	10.5*	8.8*	8.8*	7.6*	7.6*	6.6*	6.6*	5.9*	5.9*	5.3*	5.3*	4.8*	4.8*	4.3*	4.3*	3.9*	3.9*	3.4*	3.4*	
0	HR	2.0*	2.0*	4.2*	4.2*	8.6*	8.6*	13.3*	13.3*	10.8*	10.8*	9.0*	9.0*	7.7*	7.7*	6.8*	6.8*	6.0*	6.0*	5.3*	5.3*	4.8*	4.8*	4.3*	4.3*	3.8*	3.8*			
-1.5	HR	2.7*	2.7*	4.4*	4.4*	7.6*	7.6*	13.5*	13.5*	11.0*	11.0*	9.2*	9.2*	7.8*	7.8*	6.8*	6.8*	6.0*	6.0*	5.3*	5.3*	4.7*	4.7*	4.2*	4.2*	3.6*	3.6*			
-3.0	HR	3.5*	3.5*	5.0*	5.0*	7.6*	7.6*	12.6*	12.6*	10.9*	10.9*	9.1*	9.1*	7.8*	7.8*	6.8*	6.8*	5.9*	5.9*	5.2*	5.2*	4.6*	4.6*	4.0*	4.0*					
-4.5	HR			5.6*	5.6*	7.9*	7.9*	12.1*	12.1*	10.6*	10.6*	8.9*	8.9*	7.6*	7.6*	6.6*	6.6*	5.8*	5.8*	5.0*	5.0*	4.4*	4.4*							
-6.0	HR							12.2*	12.2*	10.1*	10.1*	8.5*	8.5*	7.3*	7.3*	6.3*	6.3*	5.4*	5.4*	4.7*	4.7*									

Height | Can be slewed through 360° | In longitudinal position of undercarriage | Max. reach | * Limited by hydr. capacity

The lift capacities are stated in metric tonnes (t) on the lifting gear's stick tip, and can be lifted 360° on firm, level supporting surface. Capacities are valid for 750 mm track flat pads. Indicated loads are based on ISO 10567 standard and do not exceed 75 % of tipping or 87 % of hydraulic capacity (indicated via *). Lifting capacity of the excavator is limited by machine stability, hydraulic capacity and maximum permissible load of the load hook.

According to European Standard, EN 474-5: In the European Union excavators have to be equipped with an overload warning device, a load diagram and automatic safety check valves on hoist cylinders and stick cylinder(s), when they are used for lifting operations which require the use of lifting accessories.

Industrial Attachment

with Industrial-Type Angled Mono Boom 11.50 m

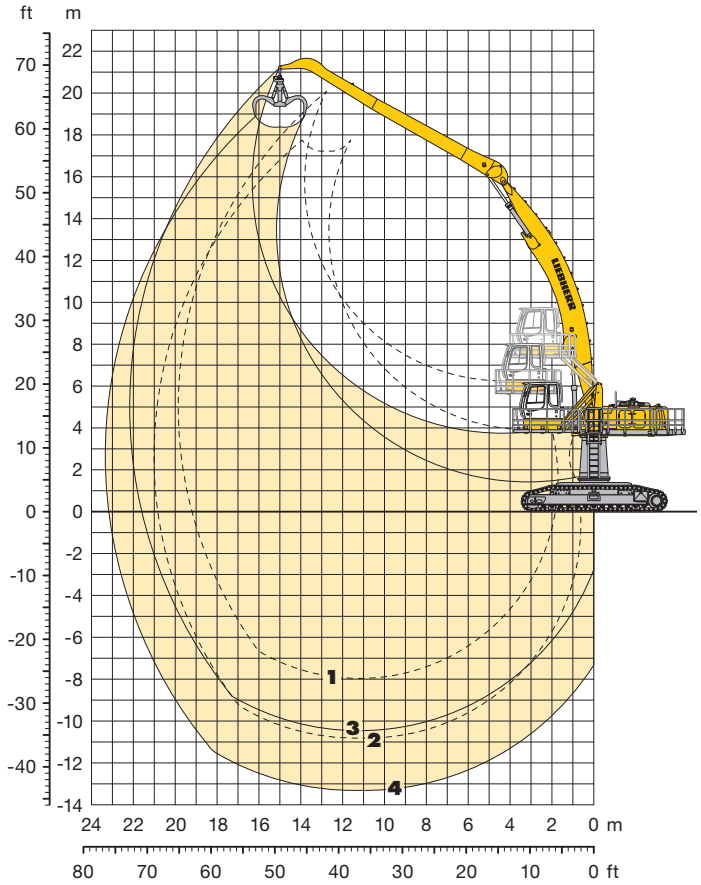

Attachment Envelope

Kinematic variant 3C

1 with industrial stick 9.50 m
2 with industrial stick 12.00 m
3 with industrial stick 9.50 m and grapple model GM 70C
4 with industrial stick 12.00 m and grapple model GM 70C

Operating Weight and Ground Pressure

Operating weight includes basic machine with hydraulic cab elevation + intermediate piece 0.5 m, counterweight 11.0 t, industrial-type angled mono boom 11.50 m, industrial stick 9.50 m and grapple model GM 70C with 5 semi-closed tines 0.80 m³ (1,705 kg).

Undercarriage		HR
Pad width	mm	750
Weight	kg	74,000
Ground pressure	kg/cm²	0.82

Operating weight includes basic machine with hydraulic cab elevation + intermediate piece 0.5 m, counterweight 11.0 t, industrial-type angled mono boom 11.50 m, industrial stick 12.00 m and grapple model GM 70C with 5 semi-closed tines 0.80 m³ (1,705 kg).

Undercarriage		HR
Pad width	mm	750
Weight	kg	74,700
Ground pressure	kg/cm²	0.83

Lift Capacities

with Industrial-Type Angled Mono Boom 11.50 m

Industrial Stick 9.50 m (Variant 3C)

m	Under-carriage	3.0 m		4.5 m		6.0 m		7.5 m		9.0 m		10.5 m		12.0 m		13.5 m		15.0 m		16.5 m		18.0 m		19.5 m		21.0 m		22.5 m				m
21.0	HR																													
19.5	HR																													
18.0	HR																													
16.5	HR																	4.4*	4.4*											
15.0	HR																	4.4*	4.4*	4.3*	4.3*									
13.5	HR																	4.4*	4.4*	4.3*	4.3*									
12.0	HR															4.7*	4.7*	4.5*	4.5*	4.4*	4.4*	4.3*	4.3*							
10.5	HR															4.9*	4.9*	4.6*	4.6*	4.5*	4.5*	4.3*	4.3*							
9.0	HR													5.5*	5.5*	5.1*	5.1*	4.8*	4.8*	4.6*	4.6*	4.4*	4.4*							
7.5	HR											6.5*	6.5*	5.9*	5.9*	5.4*	5.4*	5.0*	5.0*	4.7*	4.7*	4.5*	4.5*	4.3*	4.3*					
6.0	HR	7.1*	7.1*	16.8*	16.8*	12.2*	12.2*	9.7*	9.7*	8.2*	8.2*	7.1*	7.1*	6.3*	6.3*	5.7*	5.7*	5.3*	5.3*	4.9*	4.9*	4.6*	4.6*	4.4*	4.4*					
4.5	HR	1.8*	1.8*	7.7*	7.7*	14.2*	14.2*	11.0*	11.0*	9.0*	9.0*	7.7*	7.7*	6.7*	6.7*	6.0*	6.0*	5.5*	5.5*	5.1*	5.1*	4.7*	4.7*	4.5*	4.5*					
3.0	HR	2.0*	2.0*	5.1*	5.1*	11.6*	11.6*	12.0*	12.0*	9.7*	9.7*	8.2*	8.2*	7.1*	7.1*	6.3*	6.3*	5.7*	5.7*	5.3*	5.3*	4.9*	4.9*	4.5*	4.5*					
1.5	HR	2.8*	2.8*	5.0*	5.0*	9.0*	9.0*	12.9*	12.9*	10.4*	10.4*	8.7*	8.7*	7.5*	7.5*	6.6*	6.6*	5.9*	5.9*	5.4*	5.4*	5.0*	5.0*	4.6*	4.6*					
0	HR	3.8*	3.8*	5.4*	5.4*	8.4*	8.4*	13.4*	13.4*	10.8*	10.8*	9.1*	9.1*	7.8*	7.8*	6.9*	6.9*	6.1*	6.1*	5.5*	5.5*	5.1*	5.1*							
-1.5	HR	4.6*	4.6*	6.1*	6.1*	8.5*	8.5*	13.1*	13.1*	11.1*	11.1*	9.3*	9.3*	8.0*	8.0*	7.0*	7.0*	6.2*	6.2*	5.6*	5.6*	5.1*	5.1*							
-3.0	HR	5.4*	5.4*	6.7*	6.7*	9.0*	9.0*	12.9*	12.9*	11.3*	11.3*	9.5*	9.5*	8.1*	8.1*	7.1*	7.1*	6.3*	6.3*	5.6*	5.6*	5.0*	5.0*							
-4.5	HR			7.4*	7.4*	9.5*	9.5*	13.1*	13.1*	11.2*	11.2*	9.4*	9.4*	8.1*	8.1*	7.1*	7.1*	6.2*	6.2*	5.5*	5.5*									
-6.0	HR					10.2*	10.2*	13.1*	13.1*	10.9*	10.9*	9.2*	9.2*	7.9*	7.9*	6.9*	6.9*	6.0*	6.0*											
-7.5	HR									10.3*	10.3*	8.7*	8.7*	7.5*	7.5*	6.5*	6.5*													
-9.0	HR																													

Industrial Stick 12.00 m (Variant 3C)

m	Under-carriage	3.0 m		4.5 m		6.0 m		7.5 m		9.0 m		10.5 m		12.0 m		13.5 m		15.0 m		16.5 m		18.0 m		19.5 m		21.0 m		22.5 m				m
21.0	HR																													
19.5	HR																			3.5*	3.5*									
18.0	HR																			3.3*	3.3*									
16.5	HR																			3.3*	3.3*	3.2*	3.2*							
15.0	HR																			3.2*	3.2*	3.2*	3.2*	3.2*	3.2*					
13.5	HR																			3.3*	3.3*	3.2*	3.2*	3.2*	3.2*					
12.0	HR																			3.3*	3.3*	3.3*	3.3*	3.2*	3.2*	3.1*	3.1*			
10.5	HR																			3.5*	3.5*	3.3*	3.3*	3.2*	3.2*	3.2*	3.2*			
9.0	HR																	3.8*	3.8*	3.6*	3.6*	3.4*	3.4*	3.3*	3.3*	3.2*	3.2*			
7.5	HR															4.2*	4.2*	4.0*	4.0*	3.8*	3.8*	3.6*	3.6*	3.4*	3.4*	3.3*	3.3*			
6.0	HR													5.0*	5.0*	4.6*	4.6*	4.2*	4.2*	3.9*	3.9*	3.7*	3.7*	3.5*	3.5*	3.4*	3.4*			
4.5	HR									7.0*	7.0*	6.1*	6.1*	5.4*	5.4*	4.9*	4.9*	4.5*	4.5*	4.1*	4.1*	3.9*	3.9*	3.6*	3.6*	3.5*	3.5*			
3.0	HR	5.8*	5.8*	17.2*	17.2*	12.3*	12.3*	9.6*	9.6*	7.9*	7.9*	6.7*	6.7*	5.9*	5.9*	5.2*	5.2*	4.7*	4.7*	4.3*	4.3*	4.0*	4.0*	3.8*	3.8*	3.6*	3.6*			
1.5	HR	3.7*	3.7*	8.0*	8.0*	13.9*	13.9*	10.7*	10.7*	8.6*	8.6*	7.3*	7.3*	6.3*	6.3*	5.6*	5.6*	5.0*	5.0*	4.5*	4.5*	4.2*	4.2*	3.9*	3.9*	3.6*	3.6*			
0	HR	3.7*	3.7*	6.3*	6.3*	11.5*	11.5*	11.6*	11.6*	9.3*	9.3*	7.8*	7.8*	6.7*	6.7*	5.9*	5.9*	5.2*	5.2*	4.7*	4.7*	4.3*	4.3*	4.0*	4.0*	3.7*	3.7*			
-1.5	HR	4.1*	4.1*	6.0*	6.0*	9.5*	9.5*	12.3*	12.3*	9.9*	9.9*	8.2*	8.2*	7.0*	7.0*	6.1*	6.1*	5.4*	5.4*	4.9*	4.9*	4.4*	4.4*	4.1*	4.1*	3.7*	3.7*			
-3.0	HR	4.6*	4.6*	6.2*	6.2*	8.9*	8.9*	12.7*	12.7*	10.2*	10.2*	8.5*	8.5*	7.3*	7.3*	6.3*	6.3*	5.6*	5.6*	5.0*	5.0*	4.5*	4.5*	4.1*	4.1*					
-4.5	HR	5.1*	5.1*	6.5*	6.5*	8.8*	8.8*	13.0*	13.0*	10.5*	10.5*	8.7*	8.7*	7.5*	7.5*	6.5*	6.5*	5.7*	5.7*	5.1*	5.1*	4.6*	4.6*	4.1*	4.1*					
-6.0	HR	5.5*	5.5*	6.9*	6.9*	9.0*	9.0*	12.8*	12.8*	10.5*	10.5*	8.8*	8.8*	7.5*	7.5*	6.5*	6.5*	5.7*	5.7*	5.1*	5.1*	4.5*	4.5*							
-7.5	HR			7.3*	7.3*	9.4*	9.4*	12.7*	12.7*	10.4*	10.4*	8.7*	8.7*	7.5*	7.5*	6.5*	6.5*	5.6*	5.6*	4.9*	4.9*	4.3*	4.3*							
-9.0	HR					9.8*	9.8*	12.2*	12.2*	10.0*	10.0*	8.4*	8.4*	7.2*	7.2*	6.2*	6.2*	5.4*	5.4*	4.6*	4.6*									

Height | Can be slewed through 360° | In longitudinal position of undercarriage | Max. reach | * Limited by hydr. capacity

The lift capacities are stated in metric tonnes (t) on the lifting gear's stick tip, and can be lifted 360° on firm, level supporting surface. Capacities are valid for 750 mm track flat pads. Indicated loads are based on ISO 10567 standard and do not exceed 75 % of tipping or 87 % of hydraulic capacity (indicated via *). Lifting capacity of the excavator is limited by machine stability, hydraulic capacity and maximum permissible load of the load hook.

According to European Standard, EN 474-5: In the European Union excavators have to be equipped with an overload warning device, a load diagram and automatic safety check valves on hoist cylinders and stick cylinder(s), when they are used for lifting operations which require the use of lifting accessories.

The Right Attachment for Every Application

ER 954 C

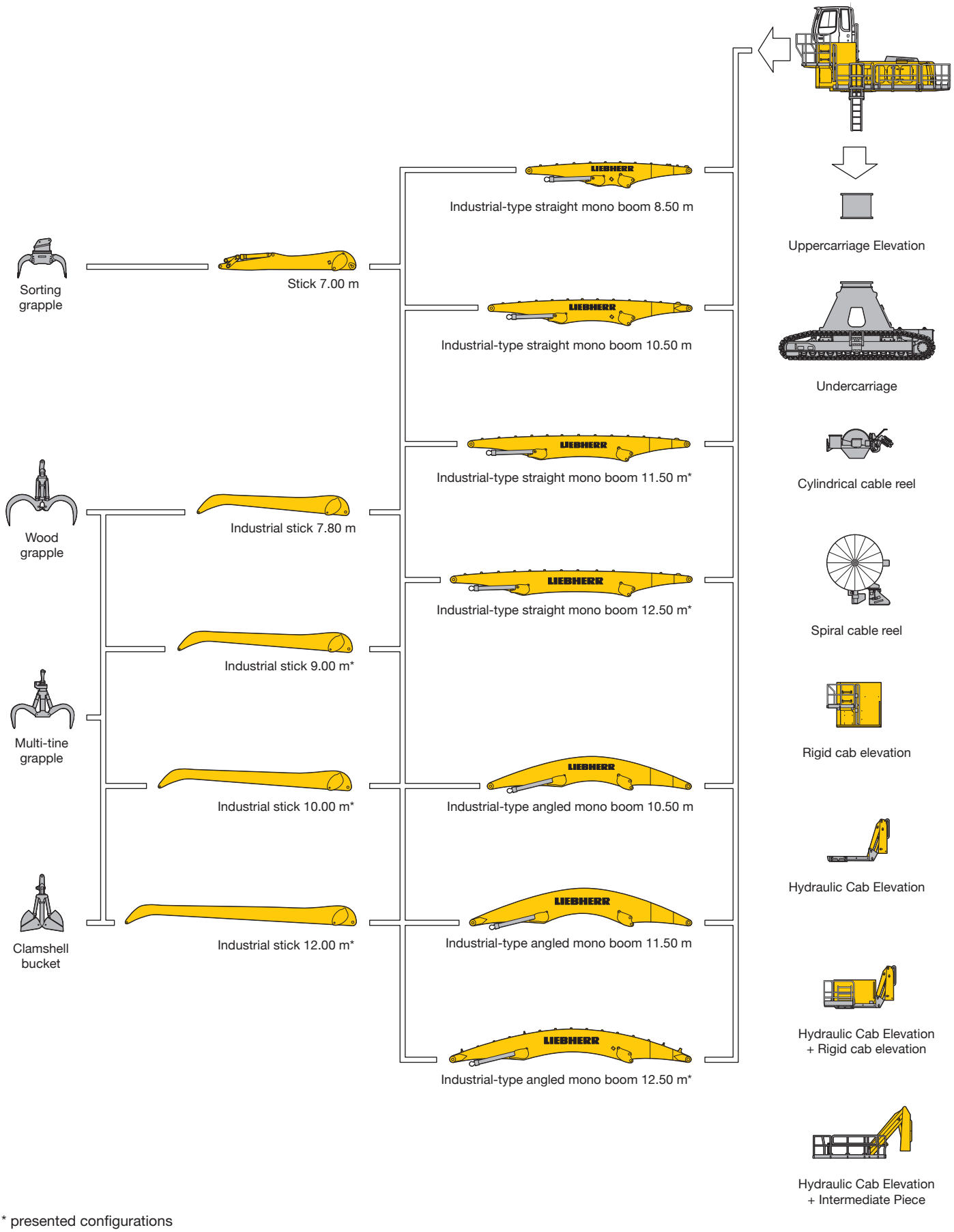

* presented configurations

Dimensions

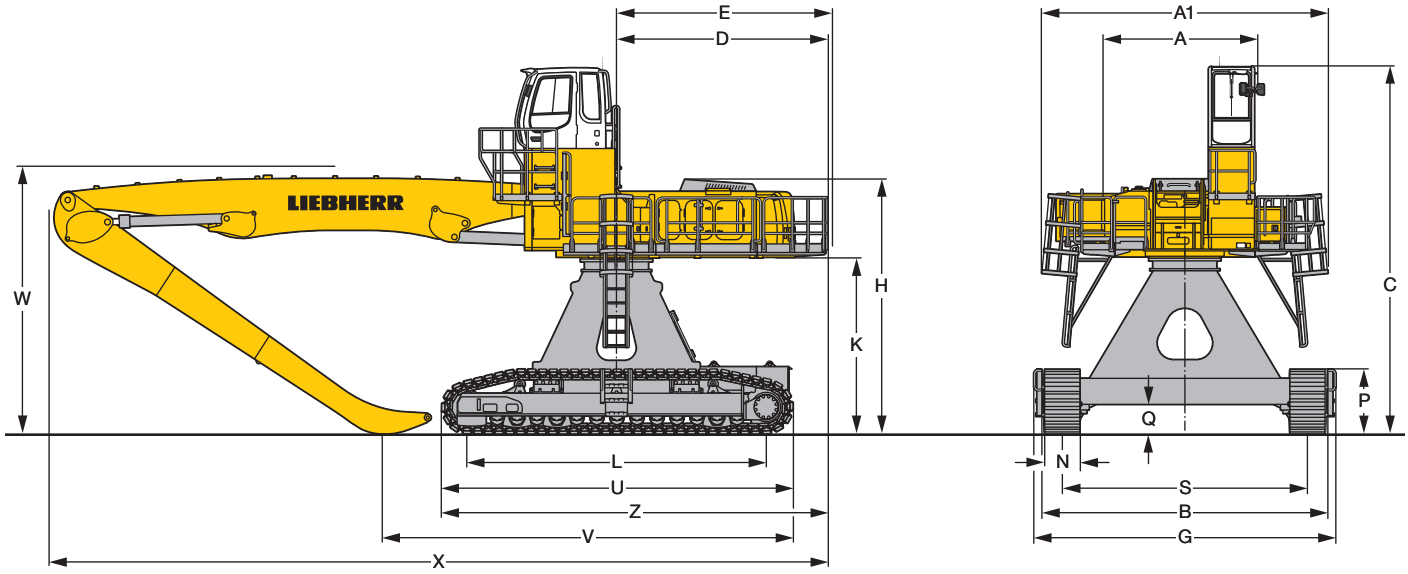

ER 954 C

		mm
A		3,300
A1		5,320
C	with Rigid Cab Elevation	7,850
C	with Hydraulic Cab Elevation Parallelogram + Intermediate Piece 0,5 m	6,350
D		4,510
E		4,600
H	with Rigid Cab Elevation	5,465
H	with Hydraulic Cab Elevation Parallelogram + Intermediate Piece 0,5 m	6,340
K		3,780
L		6,400
P		1,395
Q		640
S		5,250
U		7,540
Z		8,260
N		750
B		6,120
G		6,450

E = Tail radius

Industrial-Type Straight Mono Boom 11.50 m and Industrial Stick	m	9.00	10.00
V	mm	8,800	8,200
W	mm	5,800	5,800
X	mm	16,650	16,650

Industrial-Type Straight Mono Boom 12.50 m and Industrial Stick	m	9.00	10.00
V	mm	9,700	8,600
W	mm	5,800	5,800
X	mm	17,650	17,650

Industrial-Type Angled Mono Boom 12.50 m and Industrial Stick	m	9.00	10.00
V	mm	*	*
W	mm	5,800	5,800
X	mm	17,100	17,100

* = without stick

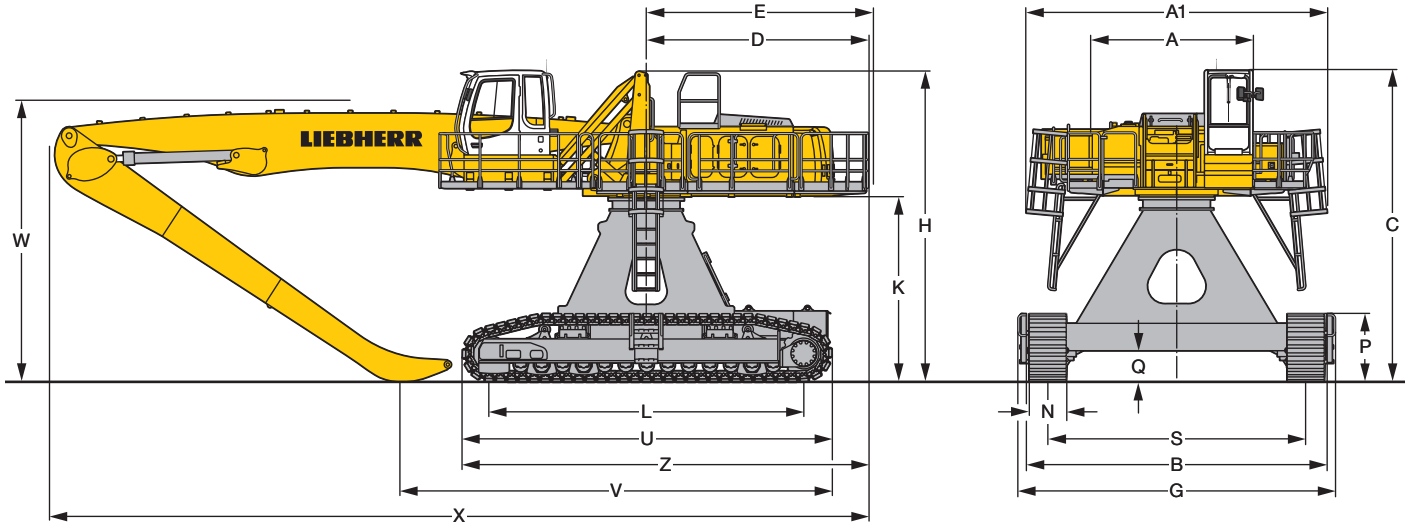

Industrial Attachment

with Industrial-Type Straight Mono Boom 11.50 m

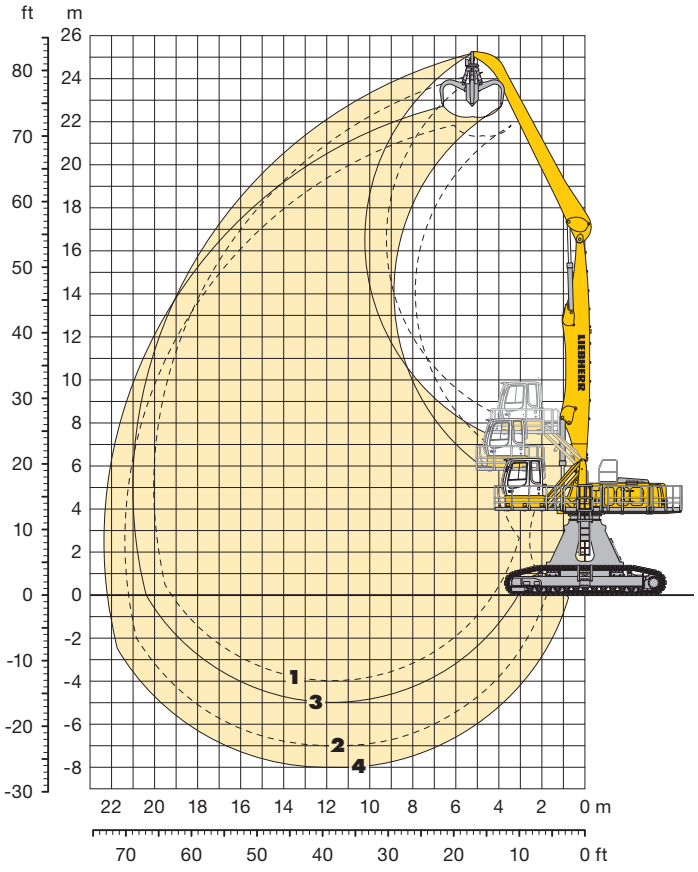

Attachment Envelope

Kinematic variants 2A

1	with industrial stick 9.00 m
2	with industrial stick 9.00 m and grapple model GMM 80
3	with industrial stick 10.00 m
4	with industrial stick 10.00 m and grapple model GMM 80

Operating Weight and Ground Pressure

Operating weight includes basic machine with hydraulic cab elevation + intermediate piece 0.5 m, counterweight 14.5 t, industrial-type straight mono boom 11.50 m, industrial stick 9.00 m and grapple model GMM 80 with 5 semi-closed tines 1.40 m³ (2,480 kg).

Undercarriage		HR
Pad width	mm	750
Weight	kg	95,800
Ground pressure	kg/cm²	1.00

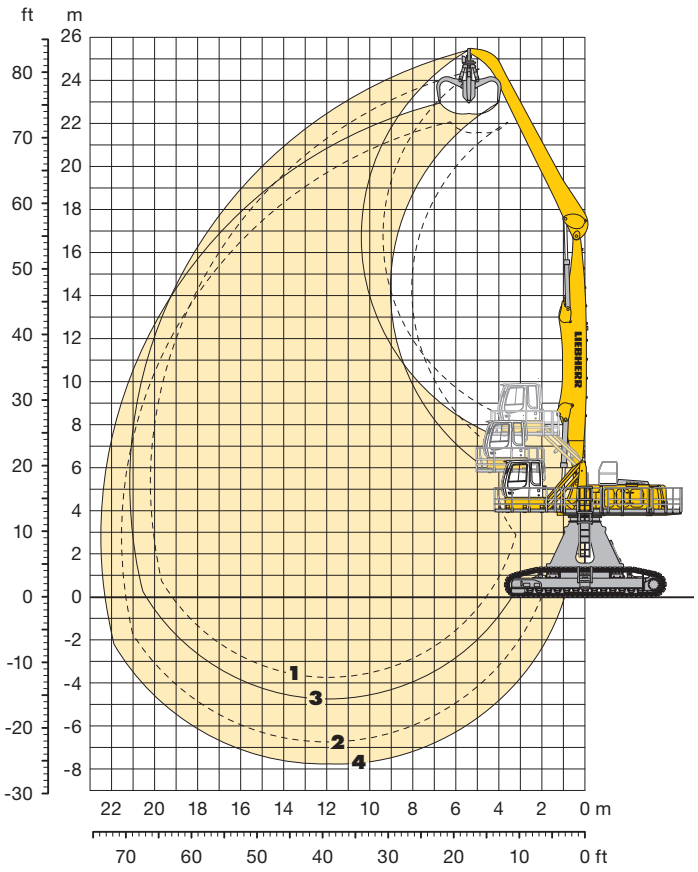

Attachment Envelope

Kinematic variants 3B

1	with industrial stick 9.00 m
2	with industrial stick 9.00 m and grapple model GMM 80
3	with industrial stick 10.00 m
4	with industrial stick 10.00 m and grapple model GMM 80

Operating Weight and Ground Pressure

Operating weight includes basic machine with hydraulic cab elevation + intermediate piece 0.5 m, counterweight 14.5 t, industrial-type straight mono boom 11.50 m, industrial stick 10.00 m and grapple model GMM 80 with 5 semi-closed tines 1.40 m³ (2,480 kg).

Undercarriage		HR
Pad width	mm	750
Weight	kg	96,200
Ground pressure	kg/cm²	1.00

Lift Capacities

with Industrial-Type Straight Mono Boom 11.50 m

Industrial Stick 9.00 m (Variant 2A)

m	Under-carriage	3.0 m		4.5 m		6.0 m		7.5 m		9.0 m		10.5 m		12.0 m		13.5 m		15.0 m		16.5 m		18.0 m		19.5 m		21.0 m				m
25.5	HR																													
24.0	HR																											13.1*	13.1*	5.9
22.5	HR							12.9*	12.9*	10.9*	10.9*																	9.9*	9.9*	9.6
21.0	HR									12.6*	12.6*	11.0*	11.0*															8.6*	8.6*	11.9
19.5	HR									13.3*	13.3*	12.3*	12.3*	10.8*	10.8*	8.5*	8.5*											7.9*	7.9*	13.7
18.0	HR											13.0*	13.0*	11.6*	11.6*	10.5*	10.5*	7.9*	7.9*									7.4*	7.4*	15.2
16.5	HR											13.0*	13.0*	11.6*	11.6*	10.4*	10.4*	9.4*	9.4*									7.0*	7.0*	16.4
15.0	HR											13.0*	13.0*	11.6*	11.6*	10.4*	10.4*	9.3*	9.3*	8.4*	8.4*							6.8*	6.8*	17.3
13.5	HR									14.6*	14.6*	13.1*	13.1*	11.6*	11.6*	10.4*	10.4*	9.3*	9.3*	8.4*	8.4*	7.1*	7.1*					6.7*	6.7*	18.1
12.0	HR									15.2*	15.2*	13.2*	13.2*	11.7*	11.7*	10.4*	10.4*	9.3*	9.3*	8.3*	8.3*	7.4*	7.4*					6.6*	6.6*	18.8
10.5	HR							15.6*	15.6*	15.5*	15.5*	13.5*	13.5*	11.8*	11.8*	10.5*	10.5*	9.3*	9.3*	8.3*	8.3*	7.3*	7.3*					6.4*	6.4*	19.3
9.0	HR					15.9*	15.9*	18.5*	18.5*	15.9*	15.9*	13.7*	13.7*	11.9*	11.9*	10.5*	10.5*	9.3*	9.3*	8.2*	8.2*	7.2*	7.2*	6.1*	6.1*			6.0*	6.0*	19.6
7.5	HR			23.9*	23.9*	24.8*	24.8*	19.7*	19.7*	16.3*	16.3*	13.8*	13.8*	12.0*	12.0*	10.5*	10.5*	9.2*	9.2*	8.1*	8.1*	7.1*	7.1*	5.9*	5.9*			5.6*	5.6*	19.9
6.0	HR			9.4*	9.4*	25.5*	25.5*	20.0*	20.0*	16.4*	16.4*	13.9*	13.9*	11.9*	11.9*	10.4*	10.4*	9.1*	9.1*	7.9*	7.9*	6.9*	6.9*	5.7*	5.7*			5.1*	5.1*	20.0
4.5	HR			2.5*	2.5*	12.3*	12.3*	19.9*	19.9*	16.3*	16.3*	13.7*	13.7*	11.7*	11.7*	10.2*	10.2*	8.8*	8.8*	7.7*	7.7*	6.6*	6.6*	5.3*	5.3*			4.7*	4.7*	20.0
3.0	HR			2.2*	2.2*	7.3*	7.3*	19.2*	19.2*	15.8*	15.8*	13.3*	13.3*	11.4*	11.4*	9.8*	9.8*	8.5*	8.5*	7.3*	7.3*	6.1*	6.1*	4.7*	4.7*			4.2*	4.2*	19.9
1.5	HR			2.9*	2.9*	6.5*	6.5*	14.0*	14.0*	14.9*	14.9*	12.6*	12.6*	10.8*	10.8*	9.3*	9.3*	7.9*	7.9*	6.7*	6.7*	5.5*	5.5*	4.0*	4.0*			3.7*	3.7*	19.7
0	HR			4.0*	4.0*	6.9*	6.9*	12.5*	12.5*	13.5*	13.5*	11.6*	11.6*	9.9*	9.9*	8.5*	8.5*	7.2*	7.2*	6.0*	6.0*	4.7*	4.7*					3.3*	3.3*	19.2
-1.5	HR					7.7*	7.7*	12.4*	12.4*	11.7*	11.7*	10.1*	10.1*	8.7*	8.7*	7.4*	7.4*	6.2*	6.2*	5.0*	5.0*							3.6*	3.6*	17.9
-3.0	HR									9.4*	9.4*	8.3*	8.3*	7.2*	7.2*	6.1*	6.1*	4.9*	4.9*									4.3*	4.3*	15.8
-4.5	HR																													

Industrial Stick 10.00 m (Variant 2A)

m	Under-carriage	3.0 m		4.5 m		6.0 m		7.5 m		9.0 m		10.5 m		12.0 m		13.5 m		15.0 m		16.5 m		18.0 m		19.5 m		21.0 m				m
25.5	HR																													
24.0	HR							11.4*	11.4*																			9.7*	9.7*	8.7
22.5	HR									11.2*	11.2*	9.6*	9.6*															8.1*	8.1*	11.5
21.0	HR											10.9*	10.9*	9.5*	9.5*	7.3*	7.3*											7.2*	7.2*	13.5
19.5	HR											11.5*	11.5*	10.6*	10.6*	9.2*	9.2*	7.0*	7.0*									6.7*	6.7*	15.1
18.0	HR											11.9*	11.9*	11.2*	11.2*	10.1*	10.1*	8.8*	8.8*									6.3*	6.3*	16.5
16.5	HR											12.2*	12.2*	11.2*	11.2*	10.0*	10.0*	9.1*	9.1*	8.1*	8.1*							6.0*	6.0*	17.6
15.0	HR											12.5*	12.5*	11.2*	11.2*	10.0*	10.0*	9.1*	9.1*	8.2*	8.2*	7.0*	7.0*					5.9*	5.9*	18.5
13.5	HR											12.6*	12.6*	11.2*	11.2*	10.1*	10.1*	9.1*	9.1*	8.2*	8.2*	7.3*	7.3*					5.8*	5.8*	19.2
12.0	HR											12.8*	12.8*	11.3*	11.3*	10.1*	10.1*	9.1*	9.1*	8.2*	8.2*	7.3*	7.3*	6.4*	6.4*			5.7*	5.7*	19.8
10.5	HR									13.7*	13.7*	13.0*	13.0*	11.4*	11.4*	10.2*	10.2*	9.1*	9.1*	8.1*	8.1*	7.2*	7.2*	6.3*	6.3*			5.7*	5.7*	20.3
9.0	HR							13.9*	13.9*	15.4*	15.4*	13.2*	13.2*	11.6*	11.6*	10.2*	10.2*	9.1*	9.1*	8.1*	8.1*	7.2*	7.2*	6.2*	6.2*			5.4*	5.4*	20.6
7.5	HR					15.1*	15.1*	17.9*	17.9*	15.8*	15.8*	13.4*	13.4*	11.7*	11.7*	10.2*	10.2*	9.0*	9.0*	8.0*	8.0*	7.1*	7.1*	6.1*	6.1*			5.0*	5.0*	20.9
6.0	HR			33.8*	33.8*	24.8*	24.8*	19.5*	19.5*	16.1*	16.1*	13.6*	13.6*	11.7*	11.7*	10.2*	10.2*	9.0*	9.0*	7.9*	7.9*	6.9*	6.9*	5.9*	5.9*			4.7*	4.7*	21.0
4.5	HR			6.0*	6.0*	25.2*	25.2*	19.7*	19.7*	16.1*	16.1*	13.5*	13.5*	11.6*	11.6*	10.1*	10.1*	8.8*	8.8*	7.7*	7.7*	6.6*	6.6*	5.6*	5.6*	4.3*	4.3*	4.3*	4.3*	21.0
3.0	HR	0.2*	0.2*	3.3*	3.3*	10.5*	10.5*	19.4*	19.4*	15.8*	15.8*	13.3*	13.3*	11.3*	11.3*	9.8*	9.8*	8.5*	8.5*	7.4*	7.4*	6.3*	6.3*	5.2*	5.2*			3.8*	3.8*	20.9
1.5	HR	1.2*	1.2*	3.3*	3.3*	7.6*	7.6*	17.9*	17.9*	15.2*	15.2*	12.8*	12.8*	10.9*	10.9*	9.4*	9.4*	8.1*	8.1*	6.9*	6.9*	5.8*	5.8*	4.6*	4.6*			3.3*	3.3*	20.7
0	HR			4.0*	4.0*	7.2*	7.2*	13.8*	13.8*	14.1*	14.1*	11.9*	11.9*	10.2*	10.2*	8.7*	8.7*	7.5*	7.5*	6.3*	6.3*	5.2*	5.2*	3.9*	3.9*			2.8*	2.8*	20.4
-1.5	HR			4.9*	4.9*	7.6*	7.6*	12.7*	12.7*	12.6*	12.6*	10.8*	10.8*	9.2*	9.2*	7.9*	7.9*	6.7*	6.7*	5.5*	5.5*	4.3*	4.3*					3.0*	3.0*	19.3
-3.0	HR					8.3*	8.3*	12.1*	12.1*	10.6*	10.6*	9.2*	9.2*	7.9*	7.9*	6.7*	6.7*	5.6*	5.6*	4.4*	4.4*							3.4*	3.4*	17.7
-4.5	HR									8.2*	8.2*	7.3*	7.3*	6.3*	6.3*	5.2*	5.2*											4.3*	4.3*	14.8

Height | Can be slewed through 360° | In longitudinal position of undercarriage | Max. reach | * Limited by hydr. capacity

The lift capacities are stated in metric tonnes (t) on the lifting gear's stick tip, and can be lifted 360° on firm, level supporting surface. Capacities are valid for 750 mm track flat pads. Indicated loads are based on ISO 10567 standard and do not exceed 75 % of tipping or 87 % of hydraulic capacity (indicated via *). Lifting capacity of the excavator is limited by machine stability, hydraulic capacity and maximum permissible load of the load hook.

According to European Standard, EN 474-5: In the European Union excavators have to be equipped with an overload warning device, a load diagram and automatic safety check valves on hoist cylinders and stick cylinder(s), when they are used for lifting operations which require the use of lifting accessories.

Lift Capacities

with Industrial-Type Straight Mono Boom 11.50 m

Industrial Stick 9.00 m (Variant 3B)

m	Under-carriage	3.0 m		4.5 m		6.0 m		7.5 m		9.0 m		10.5 m		12.0 m		13.5 m		15.0 m		16.5 m		18.0 m		19.5 m		21.0 m				m
25.5	HR																													
24.0	HR					13.6*	13.6*																					12.3*	12.3*	6.8
22.5	HR							13.2*	13.2*	11.5*	11.5*																	9.7*	9.7*	10.1
21.0	HR									11.8*	11.8*	10.8*	10.8*	9.3*	9.3*													8.5*	8.5*	12.4
19.5	HR									11.3*	11.3*	10.4*	10.4*	9.6*	9.6*	9.1*	9.1*											7.8*	7.8*	14.1
18.0	HR											10.1*	10.1*	9.4*	9.4*	8.8*	8.8*	8.4*	8.4*									7.3*	7.3*	15.5
16.5	HR											10.1*	10.1*	9.3*	9.3*	8.7*	8.7*	8.3*	8.3*	7.5*	7.5*							7.0*	7.0*	16.7
15.0	HR											10.1*	10.1*	9.4*	9.4*	8.7*	8.7*	8.2*	8.2*	7.8*	7.8*							6.8*	6.8*	17.6
13.5	HR									11.4*	11.4*	10.3*	10.3*	9.5*	9.5*	8.8*	8.8*	8.2*	8.2*	7.8*	7.8*	7.4*	7.4*					6.7*	6.7*	18.4
12.0	HR									11.8*	11.8*	10.7*	10.7*	9.7*	9.7*	9.0*	9.0*	8.3*	8.3*	7.8*	7.8*	7.4*	7.4*					6.6*	6.6*	19.0
10.5	HR							14.3*	14.3*	12.5*	12.5*	11.1*	11.1*	10.1*	10.1*	9.2*	9.2*	8.5*	8.5*	7.9*	7.9*	7.4*	7.4*					6.6*	6.6*	19.5
9.0	HR					16.3*	16.3*	15.5*	15.5*	13.3*	13.3*	11.7*	11.7*	10.4*	10.4*	9.5*	9.5*	8.7*	8.7*	8.0*	8.0*	7.5*	7.5*	6.9*	6.9*			6.6*	6.6*	19.8
7.5	HR			28.4*	28.4*	21.1*	21.1*	16.9*	16.9*	14.2*	14.2*	12.3*	12.3*	10.8*	10.8*	9.7*	9.7*	8.9*	8.9*	8.1*	8.1*	7.5*	7.5*	6.9*	6.9*			6.7*	6.7*	20.1
6.0	HR			5.4*	5.4*	23.5*	23.5*	18.3*	18.3*	15.1*	15.1*	12.9*	12.9*	11.3*	11.3*	10.0*	10.0*	9.1*	9.1*	8.3*	8.3*	7.6*	7.6*	6.9*	6.9*			6.6*	6.6*	20.2
4.5	HR			1.9*	1.9*	9.5*	9.5*	19.5*	19.5*	15.9*	15.9*	13.4*	13.4*	11.6*	11.6*	10.3*	10.3*	9.2*	9.2*	8.4*	8.4*	7.6*	7.6*	6.9*	6.9*			6.5*	6.5*	20.2
3.0	HR			2.0*	2.0*	6.4*	6.4*	16.9*	16.9*	16.4*	16.4*	13.8*	13.8*	11.9*	11.9*	10.5*	10.5*	9.4*	9.4*	8.4*	8.4*	7.6*	7.6*	6.8*	6.8*			6.4*	6.4*	20.1
1.5	HR			2.8*	2.8*	6.1*	6.1*	12.6*	12.6*	16.7*	16.7*	14.1*	14.1*	12.1*	12.1*	10.6*	10.6*	9.4*	9.4*	8.4*	8.4*	7.5*	7.5*	6.6*	6.6*			6.3*	6.3*	19.8
0	HR					6.7*	6.7*	11.7*	11.7*	16.7*	16.7*	14.1*	14.1*	12.1*	12.1*	10.6*	10.6*	9.3*	9.3*	8.3*	8.3*	7.3*	7.3*					6.4*	6.4*	19.2
-1.5	HR					7.6*	7.6*	11.8*	11.8*	16.3*	16.3*	13.8*	13.8*	11.9*	11.9*	10.4*	10.4*	9.1*	9.1*	8.0*	8.0*							7.0*	7.0*	17.8
-3.0	HR									15.5*	15.5*	13.2*	13.2*	11.4*	11.4*	9.9*	9.9*	8.6*	8.6*									8.3*	8.3*	15.5
-4.5	HR											12.6*	12.6*	10.8*	10.8*	9.4*	9.4*											8.9*	8.9*	14.1

Industrial Stick 10.00 m (Variant 3B)

m	Under-carriage	3.0 m		4.5 m		6.0 m		7.5 m		9.0 m		10.5 m		12.0 m		13.5 m		15.0 m		16.5 m		18.0 m		19.5 m		21.0 m				m
25.5	HR																													
24.0	HR							11.8*	11.8*	9.9*	9.9*																	9.4*	9.4*	9.3
22.5	HR									11.5*	11.5*	10.0*	10.0*															7.9*	7.9*	12.0
21.0	HR											10.0*	10.0*	9.3*	9.3*	8.0*	8.0*											7.1*	7.1*	13.9
19.5	HR											9.6*	9.6*	8.9*	8.9*	8.4*	8.4*	7.6*	7.6*									6.6*	6.6*	15.5
18.0	HR											9.4*	9.4*	8.8*	8.8*	8.2*	8.2*	7.8*	7.8*	6.9*	6.9*							6.3*	6.3*	16.8
16.5	HR											9.4*	9.4*	8.7*	8.7*	8.2*	8.2*	7.7*	7.7*	7.3*	7.3*							6.0*	6.0*	17.8
15.0	HR											9.4*	9.4*	8.7*	8.7*	8.2*	8.2*	7.7*	7.7*	7.3*	7.3*	6.9*	6.9*					5.8*	5.8*	18.7
13.5	HR											9.6*	9.6*	8.9*	8.9*	8.3*	8.3*	7.7*	7.7*	7.3*	7.3*	6.9*	6.9*					5.7*	5.7*	19.4
12.0	HR											9.9*	9.9*	9.1*	9.1*	8.4*	8.4*	7.8*	7.8*	7.3*	7.3*	6.9*	6.9*	6.6*	6.6*			5.7*	5.7*	20.0
10.5	HR									11.6*	11.6*	10.4*	10.4*	9.4*	9.4*	8.6*	8.6*	8.0*	8.0*	7.5*	7.5*	7.0*	7.0*	6.6*	6.6*			5.7*	5.7*	20.5
9.0	HR							14.0*	14.0*	12.3*	12.3*	10.9*	10.9*	9.8*	9.8*	8.9*	8.9*	8.2*	8.2*	7.6*	7.6*	7.1*	7.1*	6.6*	6.6*			5.7*	5.7*	20.8
7.5	HR			11.1*	11.1*	15.9*	15.9*	15.6*	15.6*	13.2*	13.2*	11.5*	11.5*	10.2*	10.2*	9.2*	9.2*	8.4*	8.4*	7.7*	7.7*	7.1*	7.1*	6.6*	6.6*	5.9*	5.9*	5.7*	5.7*	21.0
6.0	HR			29.7*	29.7*	21.6*	21.6*	17.1*	17.1*	14.2*	14.2*	12.2*	12.2*	10.7*	10.7*	9.5*	9.5*	8.6*	8.6*	7.9*	7.9*	7.2*	7.2*	6.7*	6.7*	6.1*	6.1*	5.8*	5.8*	21.1
4.5	HR			4.2*	4.2*	21.8*	21.8*	18.4*	18.4*	15.0*	15.0*	12.7*	12.7*	11.1*	11.1*	9.8*	9.8*	8.8*	8.8*	8.0*	8.0*	7.3*	7.3*	6.7*	6.7*	6.0*	6.0*	5.9*	5.9*	21.1
3.0	HR	0.2*	0.2*	2.8*	2.8*	8.7*	8.7*	19.4*	19.4*	15.7*	15.7*	13.2*	13.2*	11.4*	11.4*	10.1*	10.1*	9.0*	9.0*	8.1*	8.1*	7.3*	7.3*	6.6*	6.6*	5.9*	5.9*	5.9*	5.9*	21.0
1.5	HR	1.2*	1.2*	3.1*	3.1*	6.9*	6.9*	15.4*	15.4*	16.2*	16.2*	13.6*	13.6*	11.7*	11.7*	10.2*	10.2*	9.1*	9.1*	8.1*	8.1*	7.3*	7.3*	6.5*	6.5*			5.8*	5.8*	20.8
0	HR			3.9*	3.9*	6.9*	6.9*	12.6*	12.6*	16.3*	16.3*	13.7*	13.7*	11.8*	11.8*	10.3*	10.3*	9.1*	9.1*	8.1*	8.1*	7.2*	7.2*	6.3*	6.3*			5.7*	5.7*	20.4
-1.5	HR					7.4*	7.4*	12.0*	12.0*	16.2*	16.2*	13.6*	13.6*	11.7*	11.7*	10.2*	10.2*	9.0*	9.0*	7.9*	7.9*	7.0*	7.0*					6.1*	6.1*	19.3
-3.0	HR							12.2*	12.2*	15.7*	15.7*	13.3*	13.3*	11.4*	11.4*	9.9*	9.9*	8.7*	8.7*	7.6*	7.6*							6.8*	6.8*	17.5
-4.5	HR											12.6*	12.6*	10.8*	10.8*	9.4*	9.4*											8.9*	8.9*	14.1

Height Can be slewed through 360° In longitudinal position of undercarriage Max. reach * Limited by hydr. capacity

The lift capacities are stated in metric tonnes (t) on the lifting gear's stick tip, and can be lifted 360° on firm, level supporting surface. Capacities are valid for 750 mm track flat pads. Indicated loads are based on ISO 10567 standard and do not exceed 75 % of tipping or 87 % of hydraulic capacity (indicated via *). Lifting capacity of the excavator is limited by machine stability, hydraulic capacity and maximum permissible load of the load hook.

According to European Standard, EN 474-5: In the European Union excavators have to be equipped with an overload warning device, a load diagram and automatic safety check valves on hoist cylinders and stick cylinder(s), when they are used for lifting operations which require the use of lifting accessories.

Industrial Attachment

with Industrial-Type Straight Mono Boom 12.50 m

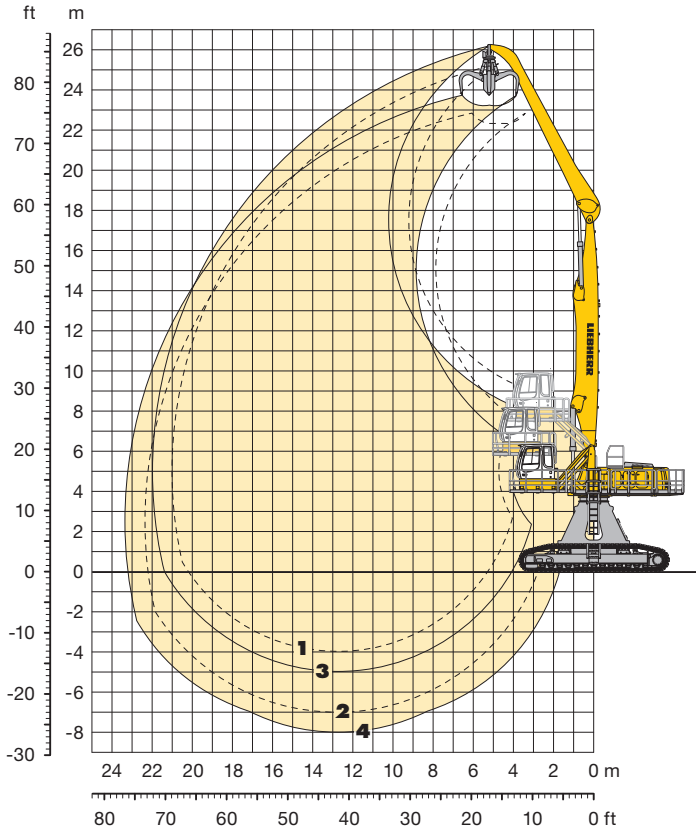

Attachment Envelope

Kinematic variants 2A

1 with industrial stick 9.00 m
2 with industrial stick 9.00 m and grapple model GMM 80
3 with industrial stick 10.00 m
4 with industrial stick 10.00 m and grapple model GMM 80

Operating Weight and Ground Pressure

Operating weight includes basic machine with hydraulic cab elevation + intermediate piece 0.5 m, counterweight 14.5 t, industrial-type straight mono boom 12.50 m, industrial stick 9.00 m and grapple model GMM 80 with 5 semi-closed tines 1.10 m³ (2,400 kg).

Undercarriage		HR
Pad width	mm	750
Weight	kg	96,200
Ground pressure	kg/cm²	1.00

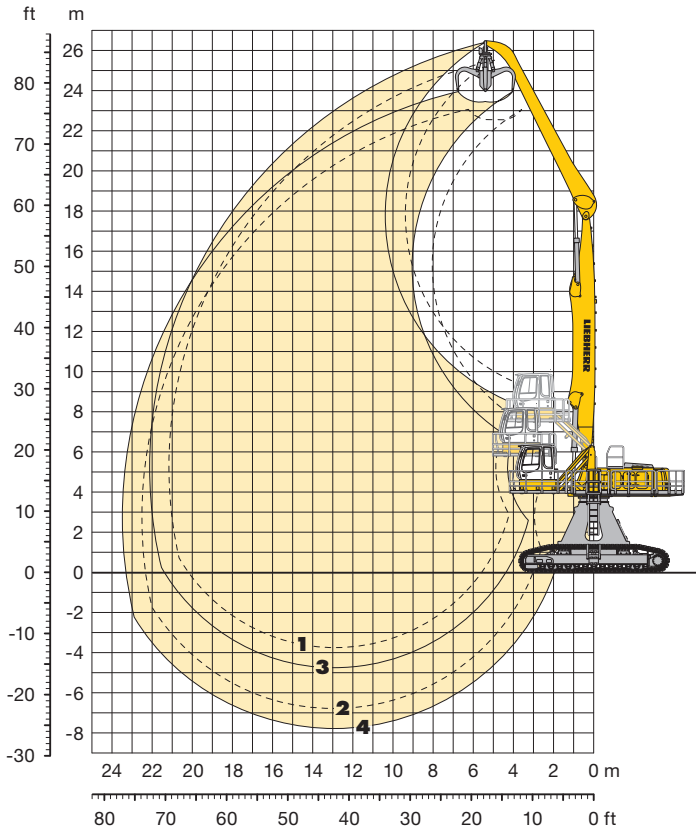

Attachment Envelope

Kinematic variants 3B

1 with industrial stick 9.00 m
2 with industrial stick 9.00 m and grapple model GMM 80
3 with industrial stick 10.00 m
4 with industrial stick 10.00 m and grapple model GMM 80

Operating Weight and Ground Pressure

Operating weight includes basic machine with hydraulic cab elevation + intermediate piece 0.5 m, counterweight 14.5 t, industrial-type straight mono boom 12.50 m, industrial stick 10.00 m and grapple model GMM 80 with 5 semi-closed tines 1.10 m³ (2,400 kg).

Undercarriage		HR
Pad width	mm	750
Weight	kg	96,600
Ground pressure	kg/cm²	1.00

Lift Capacities

with Industrial-Type Straight Mono Boom 12.50 m

ER 954 C

Industrial Stick 9.00 m (Variant 2A)

m	Under-carriage	3.0 m		4.5 m		6.0 m		7.5 m		9.0 m		10.5 m		12.0 m		13.5 m		15.0 m		16.5 m		18.0 m		19.5 m		21.0 m				m
25.5	HR																													
24.0	HR							12.4*	12.4*																			10.7*	10.7*	8.7
22.5	HR									12.3*	12.3*	10.6*	10.6*															9.0*	9.0*	11.5
21.0	HR									13.1*	13.1*	12.1*	12.1*	10.6*	10.6*	8.2*	8.2*											8.1*	8.1*	13.5
19.5	HR									13.6*	13.6*	12.9*	12.9*	11.4*	11.4*	10.2*	10.2*	7.9*	7.9*									7.6*	7.6*	15.1
18.0	HR											12.9*	12.9*	11.4*	11.4*	10.1*	10.1*	9.0*	9.0*									7.2*	7.2*	16.5
16.5	HR											12.8*	12.8*	11.3*	11.3*	10.1*	10.1*	9.0*	9.0*	8.1*	8.1*							6.9*	6.9*	17.6
15.0	HR									14.4*	14.4*	12.9*	12.9*	11.3*	11.3*	10.1*	10.1*	9.0*	9.0*	8.1*	8.1*	7.1*	7.1*					6.8*	6.8*	18.5
13.5	HR									15.0*	15.0*	13.0*	13.0*	11.4*	11.4*	10.1*	10.1*	9.0*	9.0*	8.0*	8.0*	7.1*	7.1*					6.3*	6.3*	19.2
12.0	HR							15.0*	15.0*	15.2*	15.2*	13.1*	13.1*	11.5*	11.5*	10.1*	10.1*	9.0*	9.0*	8.0*	8.0*	7.1*	7.1*	6.1*	6.1*			5.9*	5.9*	19.8
10.5	HR					14.7*	14.7*	17.0*	17.0*	15.5*	15.5*	13.2*	13.2*	11.5*	11.5*	10.1*	10.1*	9.0*	9.0*	7.9*	7.9*	7.0*	7.0*	6.1*	6.1*			5.5*	5.5*	20.3
9.0	HR			16.0*	16.0*	20.3*	20.3*	19.0*	19.0*	15.7*	15.7*	13.4*	13.4*	11.5*	11.5*	10.1*	10.1*	8.9*	8.9*	7.9*	7.9*	6.9*	6.9*	6.0*	6.0*			5.1*	5.1*	20.6
7.5	HR			19.5*	19.5*	24.6*	24.6*	19.3*	19.3*	15.9*	15.9*	13.4*	13.4*	11.5*	11.5*	10.0*	10.0*	8.8*	8.8*	7.7*	7.7*	6.8*	6.8*	5.8*	5.8*			4.7*	4.7*	20.9
6.0	HR					11.2*	11.2*	19.3*	19.3*	15.8*	15.8*	13.2*	13.2*	11.3*	11.3*	9.8*	9.8*	8.6*	8.6*	7.5*	7.5*	6.5*	6.5*	5.5*	5.5*			4.3*	4.3*	21.0
4.5	HR					4.6*	4.6*	16.4*	16.4*	15.4*	15.4*	12.9*	12.9*	11.1*	11.1*	9.6*	9.6*	8.3*	8.3*	7.2*	7.2*	6.2*	6.2*	5.2*	5.2*	3.9*	3.9*	3.9*	3.9*	21.0
3.0	HR			0.5*	0.5*	3.7*	3.7*	10.0*	10.0*	14.6*	14.6*	12.3*	12.3*	10.6*	10.6*	9.1*	9.1*	7.9*	7.9*	6.8*	6.8*	5.8*	5.8*	4.8*	4.8*			3.5*	3.5*	20.9
1.5	HR			1.5*	1.5*	4.1*	4.1*	8.5*	8.5*	13.4*	13.4*	11.5*	11.5*	9.9*	9.9*	8.5*	8.5*	7.4*	7.4*	6.3*	6.3*	5.3*	5.3*	4.2*	4.2*			3.0*	3.0*	20.7
0	HR					4.9*	4.9*	8.5*	8.5*	11.8*	11.8*	10.3*	10.3*	9.0*	9.0*	7.8*	7.8*	6.7*	6.7*	5.6*	5.6*	4.6*	4.6*	3.4*	3.4*			2.6*	2.6*	20.2
-1.5	HR							9.0*	9.0*	9.9*	9.9*	8.9*	8.9*	7.8*	7.8*	6.7*	6.7*	5.7*	5.7*	4.7*	4.7*	3.7*	3.7*					2.9*	2.9*	18.9
-3.0	HR									7.7*	7.7*	7.1*	7.1*	6.3*	6.3*	5.4*	5.4*	4.6*	4.6*	3.6*	3.6*							3.4*	3.4*	16.8
-4.5	HR																													

Industrial Stick 10.00 m (Variant 2A)

m	Under-carriage	3.0 m		4.5 m		6.0 m		7.5 m		9.0 m		10.5 m		12.0 m		13.5 m		15.0 m		16.5 m		18.0 m		19.5 m		21.0 m				m
25.5	HR							10.7*	10.7*																			10.6*	10.6*	7.6
24.0	HR									10.9*	10.9*	9.1*	9.1*															8.5*	8.5*	10.9
22.5	HR									11.7*	11.7*	10.7*	10.7*	9.2*	9.2*													7.5*	7.5*	13.2
21.0	HR											11.4*	11.4*	10.5*	10.5*	9.1*	9.1*											6.9*	6.9*	15.0
19.5	HR											11.8*	11.8*	11.1*	11.1*	9.9*	9.9*	8.8*	8.8*									6.5*	6.5*	16.5
18.0	HR											12.1*	12.1*	11.0*	11.0*	9.8*	9.8*	8.8*	8.8*	7.9*	7.9*							6.2*	6.2*	17.7
16.5	HR											12.4*	12.4*	11.0*	11.0*	9.8*	9.8*	8.8*	8.8*	7.9*	7.9*	7.0*	7.0*					6.0*	6.0*	18.7
15.0	HR											12.5*	12.5*	11.0*	11.0*	9.8*	9.8*	8.8*	8.8*	7.9*	7.9*	7.0*	7.0*	6.0*	6.0*			5.8*	5.8*	19.6
13.5	HR											12.6*	12.6*	11.1*	11.1*	9.8*	9.8*	8.8*	8.8*	7.8*	7.8*	7.0*	7.0*	6.2*	6.2*			5.7*	5.7*	20.3
12.0	HR									13.4*	13.4*	12.7*	12.7*	11.1*	11.1*	9.8*	9.8*	8.8*	8.8*	7.8*	7.8*	7.0*	7.0*	6.1*	6.1*			5.3*	5.3*	20.8
10.5	HR							13.2*	13.2*	14.7*	14.7*	12.9*	12.9*	11.2*	11.2*	9.9*	9.9*	8.7*	8.7*	7.8*	7.8*	6.9*	6.9*	6.1*	6.1*	5.2*	5.2*	4.9*	4.9*	21.3
9.0	HR					13.1*	13.1*	15.8*	15.8*	15.3*	15.3*	13.0*	13.0*	11.3*	11.3*	9.9*	9.9*	8.7*	8.7*	7.7*	7.7*	6.8*	6.8*	6.0*	6.0*	5.1*	5.1*	4.6*	4.6*	21.6
7.5	HR			19.8*	19.8*	22.9*	22.9*	18.9*	18.9*	15.5*	15.5*	13.1*	13.1*	11.3*	11.3*	9.8*	9.8*	8.6*	8.6*	7.6*	7.6*	6.7*	6.7*	5.8*	5.8*	4.9*	4.9*	4.3*	4.3*	21.8
6.0	HR			6.1*	6.1*	24.3*	24.3*	19.0*	19.0*	15.5*	15.5*	13.1*	13.1*	11.2*	11.2*	9.7*	9.7*	8.5*	8.5*	7.4*	7.4*	6.5*	6.5*	5.6*	5.6*	4.7*	4.7*	3.9*	3.9*	22.0
4.5	HR			1.4*	1.4*	8.5*	8.5*	18.7*	18.7*	15.3*	15.3*	12.8*	12.8*	11.0*	11.0*	9.5*	9.5*	8.3*	8.3*	7.2*	7.2*	6.3*	6.3*	5.3*	5.3*	4.4*	4.4*	3.5*	3.5*	22.0
3.0	HR			1.3*	1.3*	5.1*	5.1*	13.9*	13.9*	14.7*	14.7*	12.4*	12.4*	10.6*	10.6*	9.1*	9.1*	7.9*	7.9*	6.9*	6.9*	5.9*	5.9*	5.0*	5.0*	3.9*	3.9*	3.1*	3.1*	21.9
1.5	HR			1.9*	1.9*	4.6*	4.6*	10.0*	10.0*	13.8*	13.8*	11.7*	11.7*	10.0*	10.0*	8.7*	8.7*	7.5*	7.5*	6.4*	6.4*	5.5*	5.5*	4.5*	4.5*	3.4*	3.4*	2.7*	2.7*	21.7
0	HR			2.8*	2.8*	5.0*	5.0*	9.0*	9.0*	12.5*	12.5*	10.7*	10.7*	9.3*	9.3*	8.0*	8.0*	6.9*	6.9*	5.9*	5.9*	4.9*	4.9*	3.9*	3.9*	2.6*	2.6*	2.2*	2.2*	21.4
-1.5	HR					5.7*	5.7*	9.0*	9.0*	10.9*	10.9*	9.5*	9.5*	8.2*	8.2*	7.1*	7.1*	6.1*	6.1*	5.1*	5.1*	4.1*	4.1*	3.0*	3.0*			2.3*	2.3*	20.3
-3.0	HR							9.5*	9.5*	8.9*	8.9*	7.9*	7.9*	6.9*	6.9*	6.0*	6.0*	5.1*	5.1*	4.1*	4.1*	3.1*	3.1*					2.6*	2.6*	18.7
-4.5	HR											6.0*	6.0*	5.4*	5.4*	4.6*	4.6*	3.8*	3.8*									3.4*	3.4*	15.8

Height | Can be slewed through 360° | In longitudinal position of undercarriage | Max. reach | * Limited by hydr. capacity

The lift capacities are stated in metric tonnes (t) on the lifting gear's stick tip, and can be lifted 360° on firm, level supporting surface. Capacities are valid for 750 mm track flat pads. Indicated loads are based on ISO 10567 standard and do not exceed 75 % of tipping or 87 % of hydraulic capacity (indicated via *). Lifting capacity of the excavator is limited by machine stability, hydraulic capacity and maximum permissible load of the load hook.

According to European Standard, EN 474-5: In the European Union excavators have to be equipped with an overload warning device, a load diagram and automatic safety check valves on hoist cylinders and stick cylinder(s), when they are used for lifting operations which require the use of lifting accessories.

Lift Capacities

with Industrial-Type Straight Mono Boom 12.50 m

Industrial Stick 9.00 m (Variant 3B)

m	Under-carriage	3.0 m		4.5 m		6.0 m		7.5 m		9.0 m		10.5 m		12.0 m		13.5 m		15.0 m		16.5 m		18.0 m		19.5 m		21.0 m				m
25.5	HR																											14.3*	14.3*	5.0
24.0	HR							12.9*	12.9*	10.9*	10.9*																	10.3*	10.3*	9.3
22.5	HR									11.9*	11.9*	10.7*	10.7*															8.9*	8.9*	12.0
21.0	HR									11.4*	11.4*	10.3*	10.3*	9.4*	9.4*	8.7*	8.7*											8.0*	8.0*	13.9
19.5	HR											10.0*	10.0*	9.2*	9.2*	8.5*	8.5*	8.0*	8.0*									7.5*	7.5*	15.5
18.0	HR											9.9*	9.9*	9.1*	9.1*	8.4*	8.4*	7.8*	7.8*	7.4*	7.4*							7.1*	7.1*	16.8
16.5	HR											9.9*	9.9*	9.1*	9.1*	8.4*	8.4*	7.8*	7.8*	7.3*	7.3*							6.9*	6.9*	17.9
15.0	HR									11.2*	11.2*	10.1*	10.1*	9.1*	9.1*	8.4*	8.4*	7.8*	7.8*	7.3*	7.3*	6.8*	6.8*					6.7*	6.7*	18.7
13.5	HR									11.6*	11.6*	10.3*	10.3*	9.3*	9.3*	8.5*	8.5*	7.8*	7.8*	7.3*	7.3*	6.8*	6.8*					6.5*	6.5*	19.5
12.0	HR							13.9*	13.9*	12.0*	12.0*	10.6*	10.6*	9.5*	9.5*	8.7*	8.7*	8.0*	8.0*	7.4*	7.4*	6.9*	6.9*	6.4*	6.4*			6.3*	6.3*	20.0
10.5	HR					14.8*	14.8*	14.8*	14.8*	12.6*	12.6*	11.0*	11.0*	9.8*	9.8*	8.9*	8.9*	8.1*	8.1*	7.5*	7.5*	6.9*	6.9*	6.4*	6.4*			6.1*	6.1*	20.5
9.0	HR	9.3*	9.3*	17.5*	17.5*	19.8*	19.8*	15.9*	15.9*	13.3*	13.3*	11.5*	11.5*	10.2*	10.2*	9.1*	9.1*	8.3*	8.3*	7.6*	7.6*	7.0*	7.0*	6.5*	6.5*			6.0*	6.0*	20.8
7.5	HR			7.0*	7.0*	21.8*	21.8*	17.1*	17.1*	14.1*	14.1*	12.0*	12.0*	10.5*	10.5*	9.3*	9.3*	8.4*	8.4*	7.7*	7.7*	7.0*	7.0*	6.5*	6.5*	5.9*	5.9*	5.9*	5.9*	21.0
6.0	HR					7.7*	7.7*	18.1*	18.1*	14.8*	14.8*	12.5*	12.5*	10.8*	10.8*	9.6*	9.6*	8.6*	8.6*	7.8*	7.8*	7.1*	7.1*	6.5*	6.5*	5.9*	5.9*	5.8*	5.8*	21.1
4.5	HR					3.8*	3.8*	13.0*	13.0*	15.3*	15.3*	12.9*	12.9*	11.1*	11.1*	9.8*	9.8*	8.7*	8.7*	7.8*	7.8*	7.1*	7.1*	6.5*	6.5*	5.8*	5.8*	5.7*	5.7*	21.1
3.0	HR			0.4*	0.4*	3.3*	3.3*	8.8*	8.8*	15.7*	15.7*	13.1*	13.1*	11.3*	11.3*	9.9*	9.9*	8.8*	8.8*	7.9*	7.9*	7.1*	7.1*	6.4*	6.4*	5.6*	5.6*	5.6*	5.6*	21.0
1.5	HR					3.9*	3.9*	7.9*	7.9*	15.8*	15.8*	13.2*	13.2*	11.4*	11.4*	9.9*	9.9*	8.8*	8.8*	7.9*	7.9*	7.0*	7.0*	6.3*	6.3*			5.5*	5.5*	20.8
0	HR					4.7*	4.7*	8.1*	8.1*	14.4*	14.4*	13.1*	13.1*	11.3*	11.3*	9.9*	9.9*	8.7*	8.7*	7.7*	7.7*	6.9*	6.9*	6.0*	6.0*			5.6*	5.6*	20.2
-1.5	HR							8.7*	8.7*	14.1*	14.1*	12.8*	12.8*	11.0*	11.0*	9.6*	9.6*	8.5*	8.5*	7.5*	7.5*	6.6*	6.6*					6.0*	6.0*	18.8
-3.0	HR											12.2*	12.2*	10.6*	10.6*	9.2*	9.2*	8.1*	8.1*									7.1*	7.1*	16.5
-4.5	HR																													

Industrial Stick 10.00 m (Variant 3B)

m	Under-carriage	3.0 m		4.5 m		6.0 m		7.5 m		9.0 m		10.5 m		12.0 m		13.5 m		15.0 m		16.5 m		18.0 m		19.5 m		21.0 m				m
25.5	HR							11.3*	11.3*																			10.2*	10.2*	8.3
24.0	HR									11.2*	11.2*	9.7*	9.7*															8.3*	8.3*	11.4
22.5	HR											10.0*	10.0*	9.1*	9.1*	7.6*	7.6*											7.4*	7.4*	13.6
21.0	HR											9.6*	9.6*	8.8*	8.8*	8.1*	8.1*	7.5*	7.5*									6.8*	6.8*	15.4
19.5	HR											9.4*	9.4*	8.6*	8.6*	8.0*	8.0*	7.4*	7.4*	7.0*	7.0*							6.4*	6.4*	16.8
18.0	HR											9.3*	9.3*	8.5*	8.5*	7.9*	7.9*	7.3*	7.3*	6.9*	6.9*	6.1*	6.1*					6.1*	6.1*	18.0
16.5	HR											9.4*	9.4*	8.5*	8.5*	7.9*	7.9*	7.3*	7.3*	6.8*	6.8*	6.5*	6.5*					5.9*	5.9*	19.0
15.0	HR											9.5*	9.5*	8.6*	8.6*	7.9*	7.9*	7.3*	7.3*	6.8*	6.8*	6.4*	6.4*	6.1*	6.1*			5.8*	5.8*	19.8
13.5	HR											9.7*	9.7*	8.8*	8.8*	8.0*	8.0*	7.4*	7.4*	6.9*	6.9*	6.4*	6.4*	6.1*	6.1*			5.7*	5.7*	20.5
12.0	HR									11.3*	11.3*	10.0*	10.0*	9.0*	9.0*	8.2*	8.2*	7.5*	7.5*	7.0*	7.0*	6.5*	6.5*	6.1*	6.1*	5.7*	5.7*	5.7*	5.7*	21.1
10.5	HR							13.2*	13.2*	11.8*	11.8*	10.4*	10.4*	9.3*	9.3*	8.4*	8.4*	7.7*	7.7*	7.1*	7.1*	6.5*	6.5*	6.1*	6.1*	5.7*	5.7*	5.5*	5.5*	21.5
9.0	HR					13.4*	13.4*	14.8*	14.8*	12.5*	12.5*	10.9*	10.9*	9.6*	9.6*	8.6*	8.6*	7.8*	7.8*	7.2*	7.2*	6.6*	6.6*	6.1*	6.1*	5.7*	5.7*	5.4*	5.4*	21.8
7.5	HR			27.4*	27.4*	20.1*	20.1*	16.0*	16.0*	13.3*	13.3*	11.4*	11.4*	10.0*	10.0*	8.9*	8.9*	8.0*	8.0*	7.3*	7.3*	6.7*	6.7*	6.2*	6.2*	5.7*	5.7*	5.3*	5.3*	22.0
6.0	HR			3.4*	3.4*	22.0*	22.0*	17.1*	17.1*	14.0*	14.0*	11.9*	11.9*	10.3*	10.3*	9.1*	9.1*	8.2*	8.2*	7.4*	7.4*	6.8*	6.8*	6.2*	6.2*	5.7*	5.7*	5.3*	5.3*	22.1
4.5	HR			0.9*	0.9*	6.6*	6.6*	18.0*	18.0*	14.6*	14.6*	12.3*	12.3*	10.6*	10.6*	9.3*	9.3*	8.3*	8.3*	7.5*	7.5*	6.8*	6.8*	6.2*	6.2*	5.6*	5.6*	5.2*	5.2*	22.1
3.0	HR			1.1*	1.1*	4.4*	4.4*	11.7*	11.7*	15.1*	15.1*	12.6*	12.6*	10.9*	10.9*	9.5*	9.5*	8.4*	8.4*	7.6*	7.6*	6.8*	6.8*	6.2*	6.2*	5.6*	5.6*	5.1*	5.1*	22.0
1.5	HR			1.8*	1.8*	4.3*	4.3*	9.0*	9.0*	15.3*	15.3*	12.8*	12.8*	11.0*	11.0*	9.6*	9.6*	8.5*	8.5*	7.6*	7.6*	6.8*	6.8*	6.1*	6.1*	5.4*	5.4*	5.0*	5.0*	21.8
0	HR			2.7*	2.7*	4.8*	4.8*	8.5*	8.5*	15.3*	15.3*	12.8*	12.8*	11.0*	11.0*	9.6*	9.6*	8.5*	8.5*	7.5*	7.5*	6.7*	6.7*	6.0*	6.0*	5.2*	5.2*	4.9*	4.9*	21.4
-1.5	HR					5.6*	5.6*	8.7*	8.7*	14.5*	14.5*	12.6*	12.6*	10.9*	10.9*	9.5*	9.5*	8.3*	8.3*	7.4*	7.4*	6.5*	6.5*	5.7*	5.7*			5.3*	5.3*	20.3
-3.0	HR							9.3*	9.3*	14.3*	14.3*	12.2*	12.2*	10.5*	10.5*	9.2*	9.2*	8.1*	8.1*	7.1*	7.1*	6.2*	6.2*					5.9*	5.9*	18.5
-4.5	HR													10.0*	10.0*	8.7*	8.7*	7.6*	7.6*									7.5*	7.5*	15.1

Height | Can be slewed through 360° | In longitudinal position of undercarriage | Max. reach | * Limited by hydr. capacity

The lift capacities are stated in metric tonnes (t) on the lifting gear's stick tip, and can be lifted 360° on firm, level supporting surface. Capacities are valid for 750 mm track flat pads. Indicated loads are based on ISO 10567 standard and do not exceed 75 % of tipping or 87 % of hydraulic capacity (indicated via *). Lifting capacity of the excavator is limited by machine stability, hydraulic capacity and maximum permissible load of the load hook.

According to European Standard, EN 474-5: In the European Union excavators have to be equipped with an overload warning device, a load diagram and automatic safety check valves on hoist cylinders and stick cylinder(s), when they are used for lifting operations which require the use of lifting accessories.

Industrial Attachment

with Industrial-Type Angled Mono Boom 12.50 m

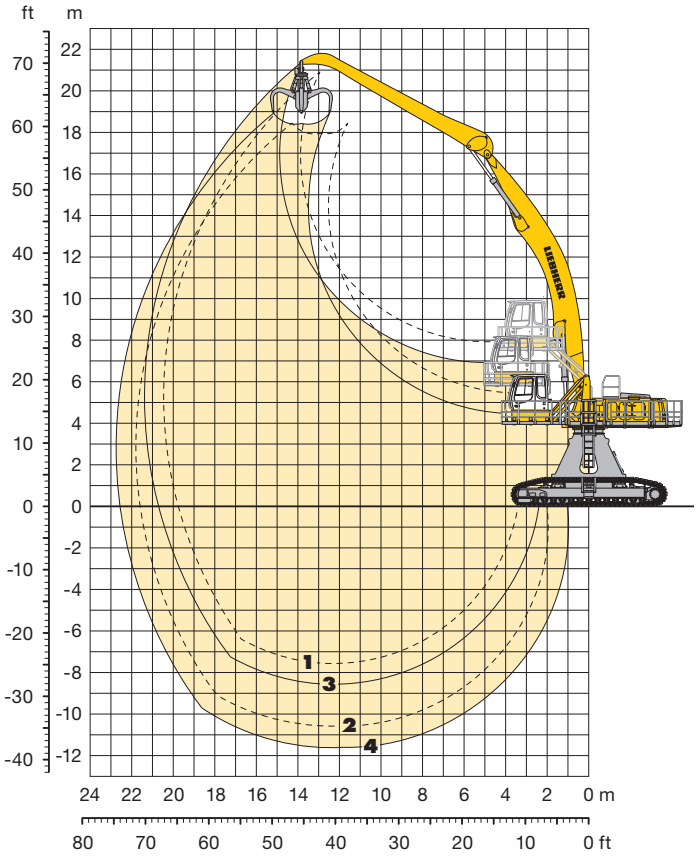

Attachment Envelope

Kinematic variant 3C

1 with industrial stick 9.00 m
2 with industrial stick 10.00 m
3 with industrial stick 9.00 m and grapple model GMM 80
4 with industrial stick 10.00 m and grapple model GMM 80

Operating Weight and Ground Pressure

Operating weight includes basic machine with hydraulic cab elevation + intermediate piece 0.5 m, counterweight 14.5 t, industrial-type angled mono boom 12.50 m, industrial stick 9.00 m and grapple model GMM 80 with 5 semi-closed tines 1.10 m³ (2,400 kg).

Undercarriage		HR
Pad width	mm	750
Weight	kg	96,600
Ground pressure	kg/cm²	1.01

Operating weight includes basic machine with hydraulic cab elevation + intermediate piece 0.5 m, counterweight 14.5 t, industrial-type angled mono boom 12.50 m, industrial stick 10.00 m and grapple model GMM 80 with 5 semi-closed tines 1.10 m³ (2,400 kg).

Undercarriage		HR
Pad width	mm	750
Weight	kg	97,000
Ground pressure	kg/cm²	1.01

Lift Capacities

with Industrial-Type Angled Mono Boom 12.50 m

Industrial Stick 9.00 m (Variant 3C)

m	Under-carriage	3.0 m		4.5 m		6.0 m		7.5 m		9.0 m		10.5 m		12.0 m		13.5 m		15.0 m		16.5 m		18.0 m		19.5 m		21.0 m				m
21.0	HR																													
19.5	HR															6.4*	6.4*											6.3*	6.3*	14.5
18.0	HR																	6.0*	6.0*									6.0*	6.0*	15.9
16.5	HR																	6.0*	6.0*	5.8*	5.8*							5.8*	5.8*	17.0
15.0	HR																	6.0*	6.0*	5.8*	5.8*							5.6*	5.6*	17.9
13.5	HR															6.4*	6.4*	6.1*	6.1*	5.8*	5.8*	5.6*	5.6*					5.6*	5.6*	18.7
12.0	HR															6.6*	6.6*	6.2*	6.2*	5.9*	5.9*	5.7*	5.7*					5.5*	5.5*	19.3
10.5	HR													7.5*	7.5*	6.9*	6.9*	6.4*	6.4*	6.1*	6.1*	5.8*	5.8*	5.5*	5.5*			5.5*	5.5*	19.7
9.0	HR											8.9*	8.9*	8.0*	8.0*	7.2*	7.2*	6.7*	6.7*	6.2*	6.2*	5.9*	5.9*	5.6*	5.6*			5.5*	5.5*	20.1
7.5	HR			17.5*	17.5*	17.1*	17.1*	13.4*	13.4*	11.1*	11.1*	9.6*	9.6*	8.4*	8.4*	7.6*	7.6*	7.0*	7.0*	6.4*	6.4*	6.0*	6.0*	5.7*	5.7*			5.6*	5.6*	20.3
6.0	HR			3.1*	3.1*	13.5*	13.5*	14.9*	14.9*	12.1*	12.1*	10.3*	10.3*	8.9*	8.9*	8.0*	8.0*	7.2*	7.2*	6.7*	6.7*	6.2*	6.2*	5.8*	5.8*			5.6*	5.6*	20.4
4.5	HR			1.9*	1.9*	7.0*	7.0*	16.3*	16.3*	13.0*	13.0*	10.9*	10.9*	9.4*	9.4*	8.4*	8.4*	7.5*	7.5*	6.9*	6.9*	6.4*	6.4*	5.9*	5.9*			5.7*	5.7*	20.4
3.0	HR			2.5*	2.5*	5.8*	5.8*	11.9*	11.9*	13.9*	13.9*	11.5*	11.5*	9.9*	9.9*	8.7*	8.7*	7.8*	7.8*	7.1*	7.1*	6.5*	6.5*	6.1*	6.1*			5.8*	5.8*	20.3
1.5	HR			3.4*	3.4*	5.9*	5.9*	10.2*	10.2*	14.5*	14.5*	12.0*	12.0*	10.3*	10.3*	9.0*	9.0*	8.0*	8.0*	7.3*	7.3*	6.7*	6.7*	6.1*	6.1*			5.9*	5.9*	20.1
0	HR			4.4*	4.4*	6.4*	6.4*	9.8*	9.8*	14.9*	14.9*	12.4*	12.4*	10.6*	10.6*	9.3*	9.3*	8.2*	8.2*	7.4*	7.4*	6.7*	6.7*	6.2*	6.2*			6.1*	6.1*	19.7
-1.5	HR			5.4*	5.4*	7.1*	7.1*	10.0*	10.0*	15.1*	15.1*	12.6*	12.6*	10.8*	10.8*	9.4*	9.4*	8.4*	8.4*	7.5*	7.5*	6.8*	6.8*					6.2*	6.2*	19.3
-3.0	HR			6.3*	6.3*	7.9*	7.9*	10.5*	10.5*	15.0*	15.0*	12.7*	12.7*	10.9*	10.9*	9.5*	9.5*	8.4*	8.4*	7.5*	7.5*	6.7*	6.7*					6.4*	6.4*	18.7
-4.5	HR					8.6*	8.6*	11.2*	11.2*	14.7*	14.7*	12.5*	12.5*	10.8*	10.8*	9.4*	9.4*	8.3*	8.3*	7.3*	7.3*							6.5*	6.5*	17.9
-6.0	HR							12.0*	12.0*	14.2*	14.2*	12.1*	12.1*	10.4*	10.4*	9.1*	9.1*	8.0*	8.0*	7.0*	7.0*							6.6*	6.6*	17.0
-7.5	HR													9.8*	9.8*													8.7*	8.7*	13.3

Industrial Stick 10.00 m (Variant 3C)

m	Under-carriage	3.0 m		4.5 m		6.0 m		7.5 m		9.0 m		10.5 m		12.0 m		13.5 m		15.0 m		16.5 m		18.0 m		19.5 m		21.0 m				m
21.0	HR																											5.9*	5.9*	14.3
19.5	HR																	5.6*	5.6*									5.5*	5.5*	15.8
18.0	HR																	5.5*	5.5*	5.3*	5.3*							5.3*	5.3*	17.1
16.5	HR																	5.4*	5.4*	5.3*	5.3*	5.1*	5.1*					5.1*	5.1*	18.1
15.0	HR																	5.5*	5.5*	5.3*	5.3*	5.1*	5.1*					5.0*	5.0*	19.0
13.5	HR																	5.6*	5.6*	5.3*	5.3*	5.1*	5.1*	5.0*	5.0*			5.0*	5.0*	19.7
12.0	HR																	5.7*	5.7*	5.4*	5.4*	5.2*	5.2*	5.0*	5.0*			4.9*	4.9*	20.3
10.5	HR															6.4*	6.4*	5.9*	5.9*	5.6*	5.6*	5.3*	5.3*	5.1*	5.1*			4.9*	4.9*	20.7
9.0	HR													7.3*	7.3*	6.7*	6.7*	6.2*	6.2*	5.8*	5.8*	5.4*	5.4*	5.2*	5.2*	5.0*	5.0*	5.0*	5.0*	21.0
7.5	HR									10.1*	10.1*	8.8*	8.8*	7.8*	7.8*	7.0*	7.0*	6.4*	6.4*	6.0*	6.0*	5.6*	5.6*	5.3*	5.3*	5.0*	5.0*	5.0*	5.0*	21.3
6.0	HR	0.6*	0.6*	9.2*	9.2*	17.5*	17.5*	13.5*	13.5*	11.1*	11.1*	9.5*	9.5*	8.3*	8.3*	7.4*	7.4*	6.7*	6.7*	6.2*	6.2*	5.8*	5.8*	5.4*	5.4*	5.1*	5.1*	5.1*	5.1*	21.4
4.5	HR	0.1*	0.1*	3.8*	3.8*	11.0*	11.0*	15.0*	15.0*	12.1*	12.1*	10.1*	10.1*	8.8*	8.8*	7.8*	7.8*	7.0*	7.0*	6.4*	6.4*	5.9*	5.9*	5.5*	5.5*	5.2*	5.2*	5.1*	5.1*	21.4
3.0	HR	1.1*	1.1*	3.3*	3.3*	7.2*	7.2*	15.6*	15.6*	12.9*	12.9*	10.8*	10.8*	9.3*	9.3*	8.2*	8.2*	7.3*	7.3*	6.6*	6.6*	6.1*	6.1*	5.7*	5.7*	5.3*	5.3*	5.2*	5.2*	21.3
1.5	HR	2.1*	2.1*	3.7*	3.7*	6.5*	6.5*	11.6*	11.6*	13.6*	13.6*	11.3*	11.3*	9.7*	9.7*	8.5*	8.5*	7.6*	7.6*	6.8*	6.8*	6.3*	6.3*	5.8*	5.8*	5.4*	5.4*	5.3*	5.3*	21.0
0	HR	3.1*	3.1*	4.3*	4.3*	6.5*	6.5*	10.4*	10.4*	14.2*	14.2*	11.8*	11.8*	10.1*	10.1*	8.8*	8.8*	7.8*	7.8*	7.0*	7.0*	6.4*	6.4*	5.9*	5.9*			5.5*	5.5*	20.7
-1.5	HR	4.0*	4.0*	5.1*	5.1*	6.9*	6.9*	10.1*	10.1*	14.5*	14.5*	12.1*	12.1*	10.3*	10.3*	9.0*	9.0*	8.0*	8.0*	7.1*	7.1*	6.5*	6.5*	5.9*	5.9*			5.6*	5.6*	20.3
-3.0	HR			5.8*	5.8*	7.5*	7.5*	10.3*	10.3*	14.6*	14.6*	12.2*	12.2*	10.5*	10.5*	9.1*	9.1*	8.1*	8.1*	7.2*	7.2*	6.5*	6.5*	5.8*	5.8*			5.7*	5.7*	19.7
-4.5	HR			6.5*	6.5*	8.1*	8.1*	10.7*	10.7*	14.5*	14.5*	12.2*	12.2*	10.5*	10.5*	9.1*	9.1*	8.0*	8.0*	7.2*	7.2*	6.4*	6.4*					5.9*	5.9*	19.0
-6.0	HR					8.7*	8.7*	11.3*	11.3*	14.2*	14.2*	12.0*	12.0*	10.3*	10.3*	9.0*	9.0*	7.9*	7.9*	7.0*	7.0*	6.1*	6.1*					6.0*	6.0*	18.1
-7.5	HR									13.5*	13.5*	11.5*	11.5*	9.9*	9.9*	8.6*	8.6*	7.5*	7.5*	6.5*	6.5*							6.3*	6.3*	16.8

Height | Can be slewed through 360° | In longitudinal position of undercarriage | Max. reach | * Limited by hydr. capacity

The lift capacities are stated in metric tonnes (t) on the lifting gear's stick tip, and can be lifted 360° on firm, level supporting surface. Capacities are valid for 750 mm track flat pads. Indicated loads are based on ISO 10567 standard and do not exceed 75 % of tipping or 87 % of hydraulic capacity (indicated via *). Lifting capacity of the excavator is limited by machine stability, hydraulic capacity and maximum permissible load of the load hook.

According to European Standard, EN 474-5: In the European Union excavators have to be equipped with an overload warning device, a load diagram and automatic safety check valves on hoist cylinders and stick cylinder(s), when they are used for lifting operations which require the use of lifting accessories.

Choice of Cab Elevation and Cab Protection

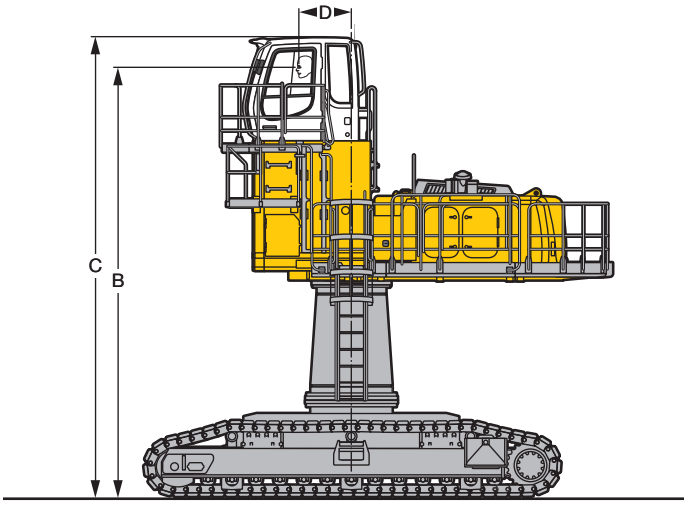

Rigid Cab Elevation

	934	944	954	934	944	954
	mm	mm	mm	mm	mm	mm
Height	1,200	1,200	1,200	2,000	2,000	2,000
B	6,150	6,380	6,550	6,950	7,180	7,350
C	6,700	6,890	7,060	7,500	7,690	7,860
D	800	880	1,100	800	880	1,100

Additional weight with fixed cab elevation 2,000 mm in relation to cab elevation 1,200 mm:
934: 400 kg 944: 400 kg 954: 400 kg

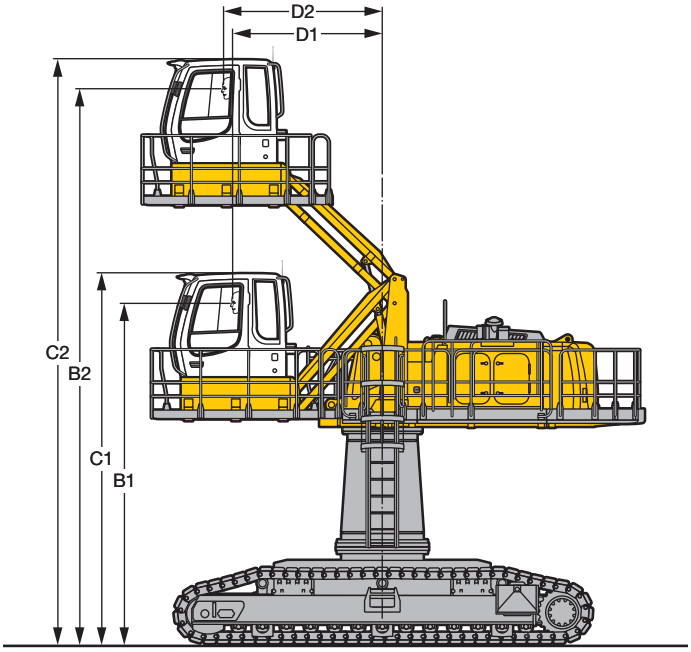

Hydraulic Cab Elevation (Parallelogram) + Intermediate Piece 0.5 m

	934	944	954
	mm	mm	mm
B1	5,290	5,680	5,850
B2	8,710	9,265	9,420
C1	5,840	6,180	6,345
C2	9,260	9,765	9,915
D1	2,400	2,500	2,850
D2	2,400	2,650	3,000

Additional weight in relation to cab elevation 1,200 mm:
934: 1,100 kg 944: 1,200 kg 954: 1,200 kg

FOPS Guard

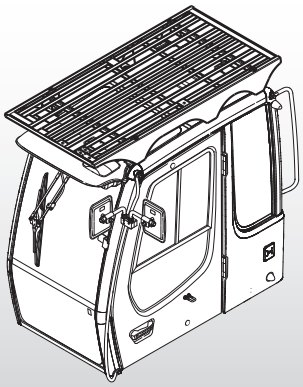

Front Guard

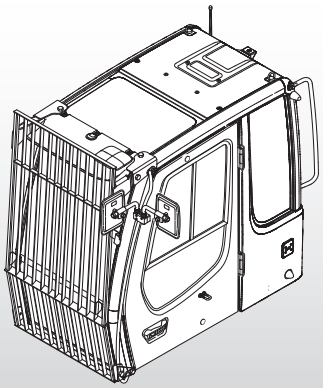

Variety of Tools

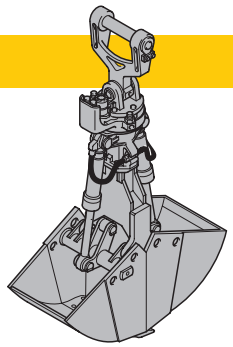

Shells for Loose Material

Shells for loose material with cutting edge (without teeth)

Clamshell Model GM 20B				
Cutting width of shells	mm	1,000	1,200	1,600
Capacity	m³	1.30	1.50	2.00
Weight	kg	1,355	1,415	1,550
Clamshell Model GM 22C				
Cutting width of shells	mm	1,500	1,500	2,000
Capacity	m³	1.85	2.20	3.00
Weight	kg	2,500	2,600	3,050
Clamshell Model GMZ 50				
Cutting width of shells	mm	1,400		
Capacity	m³	3.50		
Weight	kg	2,670		

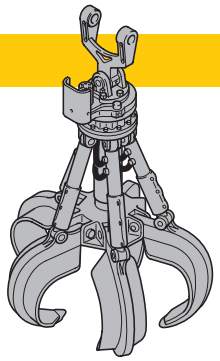

Multiple Tine Grapples

			open tines			semi-closed tines			closed tines		
934/944	**Grapple Model GM 64** (4 tines)	Capacity m³	0.40	0.60		0.40	0.60		0.40	0.60	
		Weight kg	845	1,130		1,055	1,330		1,060	1,520	
	Grapple Model GM 65 (5 tines)	Capacity m³	0.40	0.60		0.40	0.60		0.40	0.60	
		Weight kg	1,150	1,230		1,285	1,415		1,325	1,520	
	Grapple Model GM 69 (4 tines)	Capacity m³	0.80	1.10		0.80	1.10		0.80	1.10	
		Weight kg	1,345	1,395		1,535	1,640		1,900	2,060	
	Grapple Model GM 70C (5 tines)	Capacity m³	0.80	1.10		0.80	1.10		0.80	1.10	
		Weight kg	1,485	1,590		1,705	1,860		1,950	1,995	
954	**Grapple Model GMM 80** (4 tines)	Capacity m³	1.10	1.40	1.70	1.10	1.40	1.70	–	–	–
		Weight kg	1,950	1,990	2,050	2,130	2,195	2,250	–	–	–
	Grapple Model GMM 80 (5 tines)	Capacity m³	1.10	1.40	1.70	1.10	1.40	1.70	1.10	1.40	1.70
		Weight kg	2,190	2,240	2,310	2,400	2,480	2,550	2,550	2,600	2,720

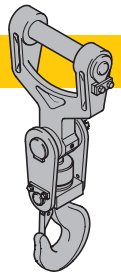

Crane Hook with Suspension

Max. load	t	12.5	32
Weight	kg	96	180

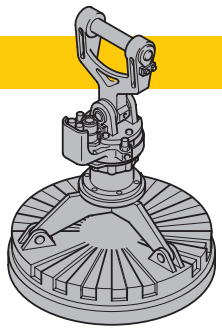

Electro Magnets with Suspension

Magnet information on request

Equipment

Uppercarriage

Complete tool set	•
Engine hood with pneumatic damping and mechanical stop	•
Handrails, non-slip surfaces	•
Junction box with shutdown	•
Lockable tool box	•
Maintenance-free swing brake lock, integrated in the transmission	•
Sound insulation	•
Wide walkways and handrails	•
Extension of security system for access to the machine	+
Frequency of 60 Hz	+
Pedal controlled positioning swing brake	+
Special painting	+
Voltage other than 400 V	+

Hydraulics

Electronic regulation by power limit	•
Filter with integrated fine filter area (5 µm)	•
Measuring points for hydraulic circuit pressure	•
Minimum flow at high pressure	•
Operating mode selector with continuous regulation	•
Pressure accumulator for controlled lowering of attachments with the engine turned off	•
Shut-off valve between hydraulic tank and pumps	•
Filling with bio-degradable oil	+
Filter for secondary circuit	+
Liebherr Tool Control	+
Supplementary hydraulic circuits	+

Operator's Cab

Automatic climate control with defrosting function	•
Cab front roof	•
Cigar lighter and ashtray	•
Closed storage space	•
Coat hook	•
Emergency exit through rear window	•
Floor mat	•
Interior lighting	•
Interior rear-view mirror	•
Multi-function display	•
Operating hours display, visible from the outside	•
Panoramic tinted windows	•
Pocket storage space	•
Radio pre-equipment	•
Right-hand window without central mounting	•
Roof window and windshield in laminated glass	•
Seat adjusted independently or in association with the console (6 adjustment positions)	•
Seat belt	•
Sliding window in door	•
Sun blind	•
Windshield wipers and windshield wash	•
Additional spotlights on cab roof (front/rear)	+
Armored windshield (not movable)	+
Electric cool box	+
Extinguishers	+
Extra supply heating	+
Radio unit	+
Seat with pneumatic suspension, headrest and heating	+
Stone impact protection (FOPS)	+
Warning beacon	+
Wipers for front lower window	+
Wipers for roof window	+

Attachment

Cylinders with end of run damper	•
Hydraulic connections for quick coupling system	•
Hydraulic lines for supply to clamshell/grapple in stick	•
Liebherr semi-automatic centralised lubrication	•
Operating spotlights	•
Safety device to prevent hose rupture (lifting cylinder) with regeneration	•
Safety device to prevent hose rupture (stick cylinder) with regeneration	•
Sealed pivots and bearings	•
Liebherr automatic centralised lubrication	+
Liebherr range of clamshells/grapples	+
Lifting hook	+
Overload warning	+
Special painting	+

• = Standard, + = Option

Options and/or special attachments, supplied by vendors other than Liebherr, are only to be installed with the knowledge and approval of Liebherr in order to retain warranty.

Liebherr-France SAS
2 avenue Joseph Rey, B.P. 90287, FR-68005 Colmar Cedex
☎ +33 389 21 30 30, Fax +33 389 21 37 93
www.liebherr.com, E-Mail: info.lfr@liebherr.com
www.facebook.com/LiebherrConstruction

Printed in Germany by Typodruck RG-BK-RP LFR/SP 11626549-2-03.13_enGB All illustrations and data may differ from standard equipment. Subject to change without notice. All indicated loads are based in accordance with ISO 9248.